MORTON®

System Saver®

Water Softener

Model MSD20F
Model MSD27B
Model MSD30D
Model MSD34C

How to install, operate and maintain your Demand Controlled Water Softener

Do not return water softener to store

If you have any questions or concerns when installing, operating or maintaining your water softener, call our toll free number:

1-888-64 WATER

(1-888-649-2837)

Monday- Friday, 8 AM - 7 PM EST
or visit www.systemsaver.com

When you call, please be prepared to provide the model and serial number of your product, found on the rating decal, typically located inside the faceplate cover, near the back.

Systems tested and certified by NSF International against NSF/ANSI Standard 44 for hardness reduction and efficiency.

INDEPENDENTLY NSF CERTIFIED

Installation and Operation Manual

For best results use Morton® System Saver® II Pellets in your water softener.

7325825 (Rev. F 1/17/11)

For best results use Morton® System Saver® II Pellets to soften your water

Morton® System Saver® II Pellets make a big difference in your water.

Morton® System Saver® II Pellets are specially formulated to consistently outperform other water softening salts in all water softeners. System Saver® II Pellets enable your water softener to remove almost twice as much dirt and impurities and up to 5% more minerals from your water than plain salt pellets. And that can mean a big difference in the quality of your water.

Morton® System Saver® II Pellets make a difference in your water softener, too.

Hard water contains traces of dirt, iron and other minerals that can build up in the resin and valves of your water softener. That can lead to expensive repairs. But Morton® System Saver® II Pellets are specially formulated to clean out those traces of dirt and minerals and to help keep your softener clean and problem-free longer than all other salt pellets. System Saver® II Pellets are formulated with salt that is guaranteed 99.5% pure and contains virtually no insolubles that need to be cleaned from your brine tank.

With Morton, Your Soft Water Solution is in the Bag.

Morton® System Saver® II Pellets come in a handy yellow 40 lb. bag that's easy to lift, carry, open and pour. The easy-open pull-tab opens just wide enough to allow salt to pour out easily, yet enables you to regulate the flow. And the sturdy handle makes it easy for you to carry.

TABLE OF CONTENTS

Page

Inspect Shipment 4
Specifications & Dimensions 5
Before You Start 6
Water Conditioning Information 6
Installation Requirements 7-8
Installation Instructions 9-12
Programming the Softener (Models MSD20F, MSD27B & MSD30D) ▪ Customizing Features / Options . . . 13-15
Programming the Softener (Model MSD34C) ▪ Customizing Features / Options 16-18
Routine Maintenance 19-20
Troubleshooting 21-23
Exploded View & Parts List 24

RESIDENTIAL LIMITED WARRANTY

Seller warrants,to the original owner, that:

- For a period of ten (10) years from the date of purchase, the salt storage tank and fiberglass mineral tank will not rust, corrode, leak, burst, or fail to perform to their specifications.
- For a period of one (1) year from the date of purchase, all other parts will be free of defects in material and workmanship.

If, during such respective period, a part proves to be defective, Seller will ship a replacement part, directly to your home, without charge.

If you have questions regarding a Morton product, need assistance with installation or troubleshooting, wish to order a part or report a warranty issue, we are just a phone call away. Simply dial 1-888-64WATER (1-888-649-2837) for assistance, or visit www.systemsaver.com.

This water softener is manufactured for Morton, P.O. Box 25290, Woodbury, MN 55125-0290

General Provisions

The warranty does not apply to any defect, malfunction or failure arising from, relating to or caused by: (i) operation at water pressures which exceed 125 psi or at water temperatures which exceed 120°F; (ii) repairs made by others than, or without the consent of, Seller or if the product has been subject to abuse, misuse, neglect, tampering, accident or damage by circumstances beyond Seller's control; (iii) products damaged or abused in shipment without fault of Seller; (iv) non-residential installations; (v) defects or failures due to misapplication, abuse, improper installation or abnormal conditions of temperature, humidity, abrasives, dirt or corrosive matter; (vi) unusual force of nature such as, but not limited to, flood, hurricane, tornado or earthquake; and (vii) products which have been in any way tampered with, modified or altered.

The foregoing warranties do not cover and Seller shall not be responsible for reimbursement for labor, transportation, removal, installation, or other expenses which may be incurred by Purchaser in connection with replacement or repair or returning the product to Seller.

THERE ARE NO WARRANTIES ON THE WATER SOFTENER BEYOND THOSE SPECIFICALLY DESCRIBED ABOVE. ALL IMPLIED WARRANTIES, INCLUDING, WITHOUT LIMITATION, ANY IMPLIED WARRANTY OF MERCHANTABILITY OR OF FITNESS FOR A PARTICULAR PURPOSE ARE HEREBY DISCLAIMED. SELLER'S SOLE LIABILITY FOR ANY PRODUCT IS LIMITED TO THE REPAIR OR REPLACEMENT OF SUCH PRODUCT, OR A REFUND OF THE PURCHASE PRICE ACTUALLY RECEIVED BY SELLER FOR SUCH PRODUCT, AT SELLER'S SOLE DISCRETION. SELLER WILL NOT BE LIABLE FOR ANY INDIRECT, INCIDENTAL, SPECIAL, CONSEQUENTIAL OR PUNITIVE DAMAGES OF ANY KIND, NATURE OR DESCRIPTION WHATSOEVER. NO MORTON DEALER, AGENT, REPRESENTATIVE, OR OTHER PERSON IS AUTHORIZED TO EXTEND, EXPAND OR MODIFY THE WARRANTIES EXPRESSLY DESCRIBED ABOVE.

Some states do not allow limitations on how long an implied warranty lasts or exclusions or limitations of incidental or consequential damage, so the limitations and exclusions in this warranty may not apply to you. This warranty gives you specific legal rights, and you may have other rights which vary from state to state. This warranty applies to consumer-owned installations only.

Inspect Shipment

The parts required to assemble and install the unit are included in a bag. Thoroughly check the water softener for possible shipping damage and parts loss. Also inspect and note any damage to the shipping carton.

Remove and discard (or recycle) all packing materials. To avoid loss of small parts, we suggest you keep the small parts in the parts bag until you are ready to use them.

Packing List

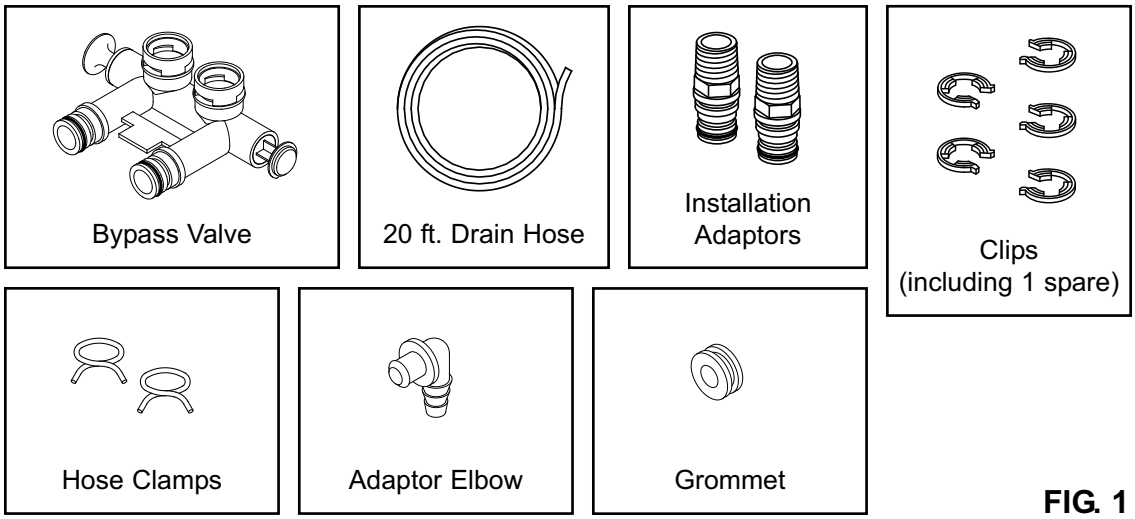

FIG. 1

Weather Protection

If installing the unit in an outside location, be sure to provide protection from the elements, contamination, vandalism and direct sunlight.

Do not return the water softener to store.

If you have any questions, or there are missing parts or damage, please call **Toll Free 1-888-64WATER (1-888-649-2837)** Monday - Friday, 8 am - 7 pm EST.

When you call, please be prepared to provide the model and serial number of your product, found on the rating decal, located on the rim below the salt lid hinges.

For more installation or service information, visit **www.systemsaver.com**.

Specifications & Dimensions

	Model MSD20F	Model MSD27B	Model MSD30D	Model MSD34C
Model Code	Sr19	Sr22	LE31	Sr28
Regeneration Control	Demand	Demand	Demand	Demand
Rated Softening Capacity (Grains @ Salt Dose)	9,310 @ 1.8 lbs. 18,000 @ 5.8 lbs. 21,500 @ 9.7 lbs.	11,100 @ 2.2 lbs. 23,700 @ 7.0 lbs. 28,200 @ 11.7 lbs.	13,200 @ 2.9 lbs. 25,500 @ 8.0 lbs. 30,000 @ 13.1 lbs.	13,700 @ 2.7 lbs. 29,200 @ 8.6 lbs. 34,900 @ 14.5 lbs.
Rated Efficiency (Grains/Pound of Salt @ Minimum Salt Dose)	5,000 @ 1.8 lbs.	5,040 @ 2.2 lbs.	4,567 @ 2.9 lbs.	5,060 @ 2.7 lbs.
Water Used During Regeneration @ Minimum Salt Dose	3.0 gallons / 1,000 grains	2.7 gallons / 1,000 grains	2.3 gallons / 1,000 grains	2.7 gallons / 1,000 grains
Rated Service Flow Rate	6.5 gpm	6.5 gpm	7.0 gpm	8.0 gpm
Amount of High Capacity Ion Exchange Resin	.61 cu. ft.	.73 cu. ft.	.82 cu. ft.	.91 cu. ft.
Pressure Drop at Rated Service Flow	6.8 psig	7.1 psig	7.4 psig	9.4 psig
Water Supply Max. Hardness	80 gpg	95 gpg	95 gpg	110 gpg
Water Supply Max. Clear Water Iron	6 ppm*	7 ppm*	7 ppm*	9 ppm*
Water Pressure Limits (min. / max.)	20 - 125 psi**			
Water Temperature Limits (min. / max.)	40 - 120 °F			
Minimum Water Supply Flow Rate	3 gpm			
Maximum Drain Flow Rate	2.2 gpm			
Salt Storage Capacity	150 lbs.	175 lbs.	150 lbs.	175 lbs.

*Capacity to reduce clear water iron is substantiated by WQA test data. State of Wisconsin requires additional treatment if water supply contains clear water iron exceeding 5 ppm.

These systems conform to NSF/ANSI 44 for the specific performance claims as verified and substantiated by test data.

The efficiency rating is only valid at the stated salt dose. These softeners were efficiency rated according to NSF/ANSI Standard 44.

Variable Salt Dose: The salt dose is selected by the electronic controls at regeneration time based on the amount needed.

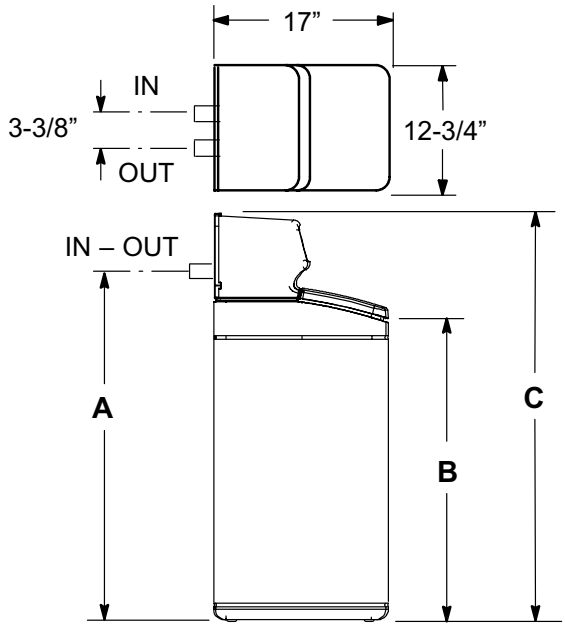

MODEL	A	B	C
MSD20F	37”	33”	42”
MSD27B	41-1/2”	37-1/2”	47”
MSD30D	37”	33”	42”
MSD34C	41-1/2”	37-1/2”	47”

FIG. 3

Before You Start

- The water softener requires a minimum water flow of 3 gallons per minute at the inlet. Maximum allowable inlet water pressure is 125 psi. If daytime pressure is over 80 psi, nighttime pressure may exceed the maximum. Use a pressure reducing valve if necessary (Adding a pressure reducing valve may reduce the flow). If your home is equipped with a back flow preventer, an expansion tank must be installed in accordance with local codes and laws.
- The water softener works on 24 volt, 60 Hz electrical power only, supplied by a direct plug-in transformer (included). Be sure to use the included transformer and plug it into a nominal 120V, 60 cycle household outlet that is in a dry location only, grounded and properly protected by an overcurrent device such as a circuit breaker or fuse. If transformer is replaced, use only UL, CUL or CSA approved Class 2 transformer with the following specifications:
  - Input: 120 VAC, 60 Hz, 13.5 W
  - Output Voltage: 24 VAC
  - Output Current: 400 mA
- Do not use this system to treat water that is microbiologically unsafe or of unknown quality without adequate disinfection upstream or downstream of the system.

European Directive 2002/96/EC requires all electrical and electronic equipment to be disposed of according to Waste Electrical and Electronic Equipment (WEEE) requirements. This directive or similar laws are in place nationally and can vary from region to region. Please refer to your state and local laws for proper disposal of this equipment.

In the state of California: You must turn the Salt Efficiency Feature setting to ON. This may initiate more frequent recharges. However, it will operate at 4,000 grains per pound of salt or higher. To turn on the Salt Efficiency Feature, follow the instructions in the “Salt Efficiency” section of this manual.

Water Conditioning Information

Iron

Iron in water can cause stains on clothing and plumbing fixtures. It can negatively affect the taste of food, drinking water, and other beverages. Iron in water is measured in parts per million (ppm). The total* ppm of iron, and type or types*, is determined by chemical analysis. Four different types of iron in water are:

- Ferrous (clear water) iron
- Ferric (red water) iron
- Bacterial and organically bound iron
- Colloidal and inorganically bound iron (ferrous or ferric)

Ferrous (clear water) iron is soluble and dissolves in water. This water softener will reduce moderate amounts of this type of iron (see specifications).** Ferrous (clear water) iron is usually detected by taking a sample of water in a clear bottle or glass. Immediately after taking, the sample is clear. As the water sample stands, it gradually clouds and turns slightly yellow or brown as air oxidizes the iron. This usually occurs in 15 to 30 minutes.

When using the softener to reduce Ferrous (clear water) iron, add 5 grains to the hardness setting for every 1 ppm of Ferrous (clear water) iron. See "Set Water Hardness Number" section.

Ferric (red water), and bacterial and organically bound irons are insoluble. This water softener will not remove ferric or bacterial iron. This iron is visible immediately when drawn from a faucet because it has oxidized before reaching the home. It appears as small cloudy yellow, orange, or reddish suspended particles. After the water stands for a period of time, the particles settle to the bottom of the container. Generally these irons are removed from water by filtration. Chlorination is also recommended for bacterial iron.

Colloidal and inorganically bound iron is of ferric or ferrous form that will not filter or exchange out of water. This water softener will not remove colloidal iron. In some instances, treatment may improve colloidal iron water. Colloidal iron water usually has a yellow appearance when drawn. After standing for several hours, the color persists and the iron does not settle, but remains suspended in the water.

Sediment

Sediment is fine, foreign material particles suspended in water. This water softener will not remove sediment. This material is most often clay or silt. Extreme amounts of sediment may give the water a cloudy appearance. A sediment filter installed upstream of the water softener normally corrects this situation.

* Water may contain one or more of the four types of iron and any combination of these. Total iron is the sum of the contents.

** Capacity to reduce clear water iron is substantiated by WQA test data.

Installation Requirements

Location Requirements

Consider all of the following when selecting an installation location for the water softener.

- Do not locate the water softener where freezing temperatures occur. Do not attempt to treat water over 120ºF. Freezing temperatures or hot water damage voids the warranty.
- To condition all water in the home, install the water softener close to the water supply inlet, and upstream of all other plumbing connections, except outside water pipes. Outside faucets should remain on hard water to avoid wasting conditioned water and salt.
- A nearby drain is needed to carry away regeneration discharge (drain) water. Use a floor drain, laundry tub, sump, standpipe, or other options (check your local codes). See "Air Gap Requirements" and "Valve Drain Requirements" sections.
- The water softener works on 24 volt, 60 Hz electrical power only, supplied by a direct plug-in transformer (included). Provide an electrical outlet within 10 feet, in accordance with NEC and local codes.
- Always install the water softener between the water inlet and water heater. Any other installed water conditioning equipment should be installed between the water inlet and water softener (See Figure 5 below).
- Avoid installing in direct sunlight. Excessive sun heat may cause distortion or other damage to non-metallic parts.

Plumbing Codes

All plumbing must be completed in accordance with national, state and local plumbing codes.

> In the state of Massachusetts: The Commonwealth of Massachusetts plumbing code 248-CMR shall be adhered to. A licensed plumber shall be used for this installation.

Air Gap Requirements

A drain is needed for regeneration water (See Figure 4). A floor drain, close to the water softener, is preferred. A laundry tub, standpipe, etc. are other drain options. Secure valve drain hose in place. Leave an air gap of 1-1/2” between the end of the hose and the drain. This gap is needed to prevent backflow of sewer water into the water softener. Do not put the end of the drain hose into the drain.

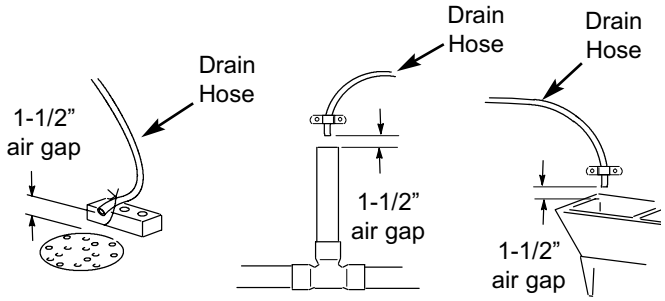

Floor Drain **Standpipe** **Laundry Tub**

FIG. 4

The Proper Order To Install Water Treatment Equipment

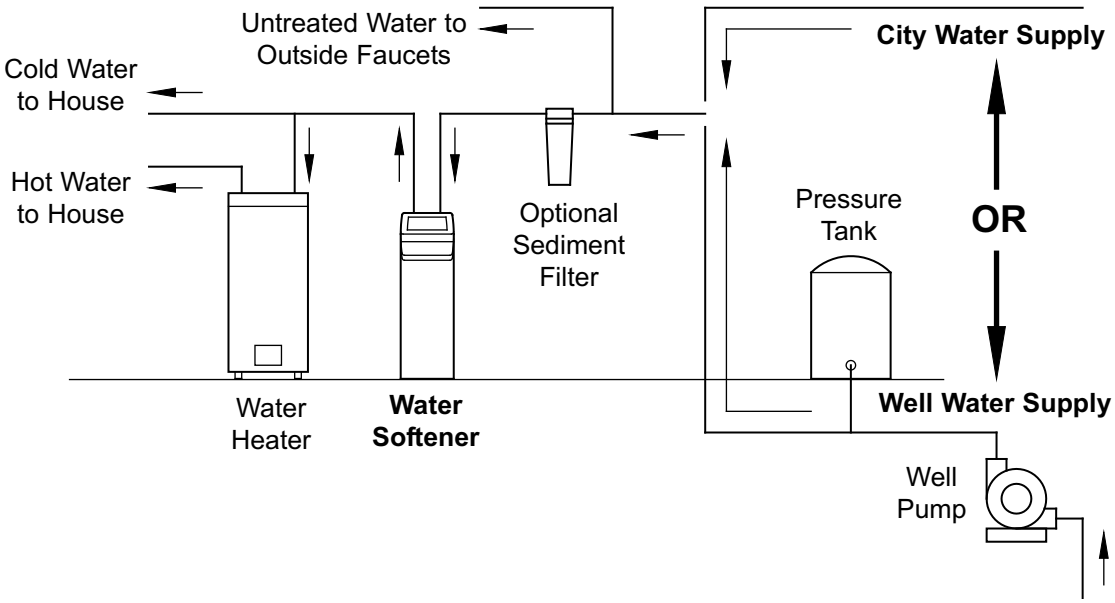

FIG. 5

Installation Requirements

Valve Drain Requirements

Using the flexible drain hose (included), measure and cut to the length needed. Flexible drain hose is not allowed in all localities (check your plumbing codes). If local codes do not allow use of a flexible drain hose, a rigid valve drain run must be used. Purchase a compression fitting (1/4 NPT x 1/2 in. minimum tube) and 1/2" tubing from your local hardware store. Plumb a rigid drain as needed (See Figure 7).

NOTE: Avoid drain hose runs longer than 30 feet. Avoid elevating the hose more than 8 feet above the floor. Make the valve drain line as short and direct as possible.

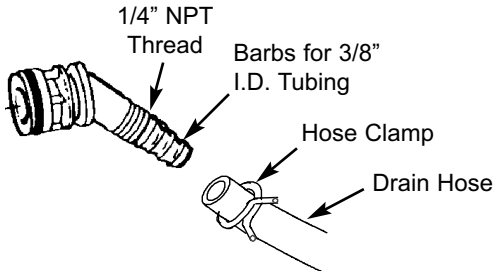

FIG. 6

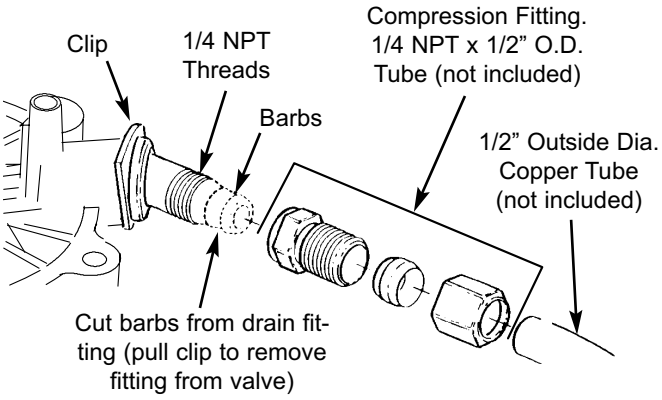

FIG. 7

Inlet / Outlet Plumbing Options

Always install either a single bypass valve (provided), as shown in Figure 8, or, if desired, parts for a 3 valve bypass system (not included) can be purchased and assembled, as shown in Figure 9. Bypass valves allow you to turn off water to the softener for maintenance if needed, but still have water in house pipes.

Pipe fittings must be 3/4” minimum.

Use:

- Copper pipe
- Threaded pipe
- PEX (Crosslinked Polyethylene) pipe
- CPVC plastic pipe
- Other pipe approved for use with potable water

IMPORTANT: Do not solder with plumbing attached to installation adaptors and single bypass valve. Soldering heat will damage the adaptors and valve.

Single Bypass Valve

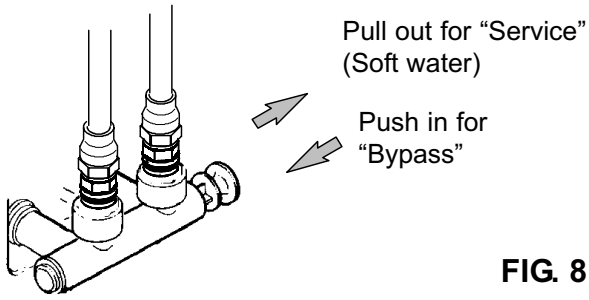

FIG. 8

3 Valve Bypass

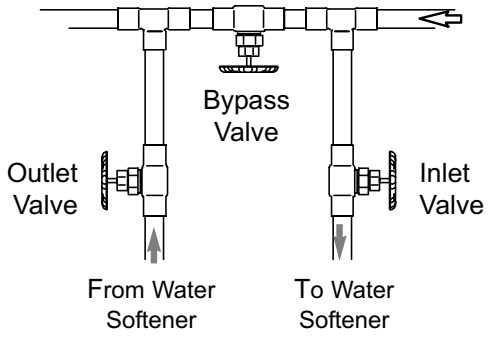

FIG. 9

Installation Instructions

Typical Installation

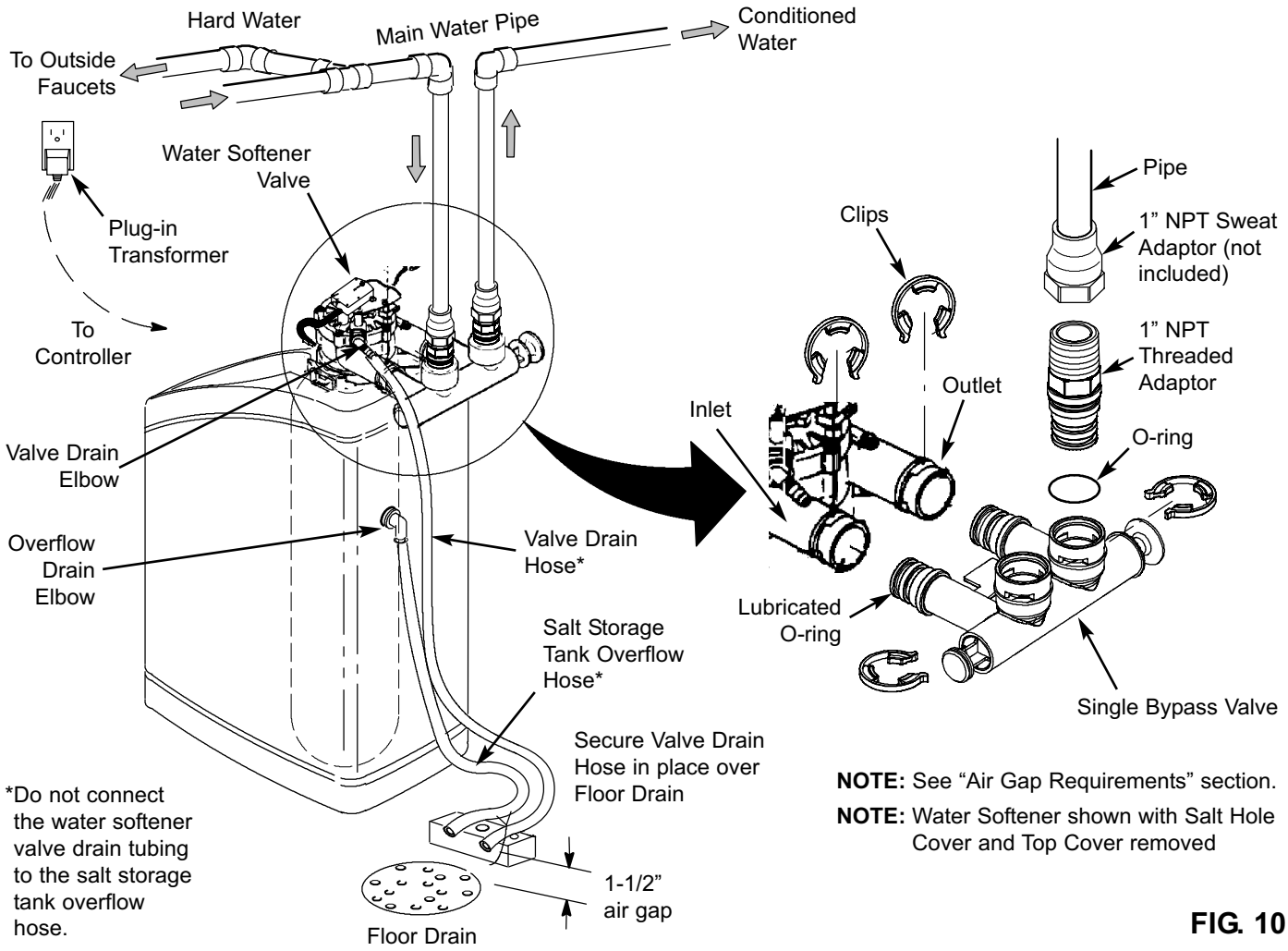

FIG. 10

Step 1. Turn Off Water Supply

1. Close the main water supply valve, located near the well pump or water meter.

2. Shut off the electric or fuel supply to the water heater.

3. Open all faucets to drain all water from house pipes.

NOTE: Be sure not to drain water from the water heater, as damage to the water heater elements could result.

Step 2. Assembly

1. Morton® System Saver® models are factory assembled. During installation, remove the Salt Hole Cover and set it aside to prevent damage. Check the brinewell to be sure it is secured and vertical (See Figure 11). Slide Faceplate Cover forward to expose back valve assembly.

2. Lift the brine valve out of the brinewell. Make sure the float stem is parallel to the stand tube so the seals will seat properly during operation. Place the brine valve back into the bottom of the brinewell and reinstall the brinewell cover.

continued on next page

continued from previous page

3. Install the brine tank overflow grommet and elbow into the 13/16” diameter hole in the back of the salt storage tank wall.

Step 3. Move the Unit into Place

1. Move the water softener into the desired location. Set it on a solid, level surface.

IMPORTANT: Do not place shims directly under the salt storage tank to level the softener. The weight of the tank, when full of water and salt, may cause the tank to fracture at the shim.

2. Visually check and remove any debris from the water softener valve inlet and outlet ports.
3. Make sure the turbine assembly spins freely in the "out" port of the valve.
4. If not already done, put a light coating of silicone grease on the single bypass valve o-rings.
5. Push the single bypass valve into the softener valve as far as it will go. Snap the two large holding clips into place, from the top down as shown in Figures 12 & 13.

IMPORTANT: Be sure the clips snap firmly into place so the single bypass valve will not pull out.

Step 4. Complete Inlet and Outlet Plumbing

Measure, cut, and loosely assemble pipe and fittings from the main water pipe to the inlet and outlet ports of the water softener valve. Be sure to keep fittings fully together, and pipes squared and straight.

Be sure hard water supply pipe goes to the water softener valve inlet side.

NOTE: Inlet and outlet are marked on the water softener valve. Trace the water flow direction to be sure hard water is to inlet.

IMPORTANT: Be sure to fit, align and support all plumbing to prevent putting stress on the water softener valve inlet and outlet. Undue stress from misaligned or unsupported plumbing may cause damage to the valve.

Complete the inlet and outlet plumbing for the type of pipes you will be using.

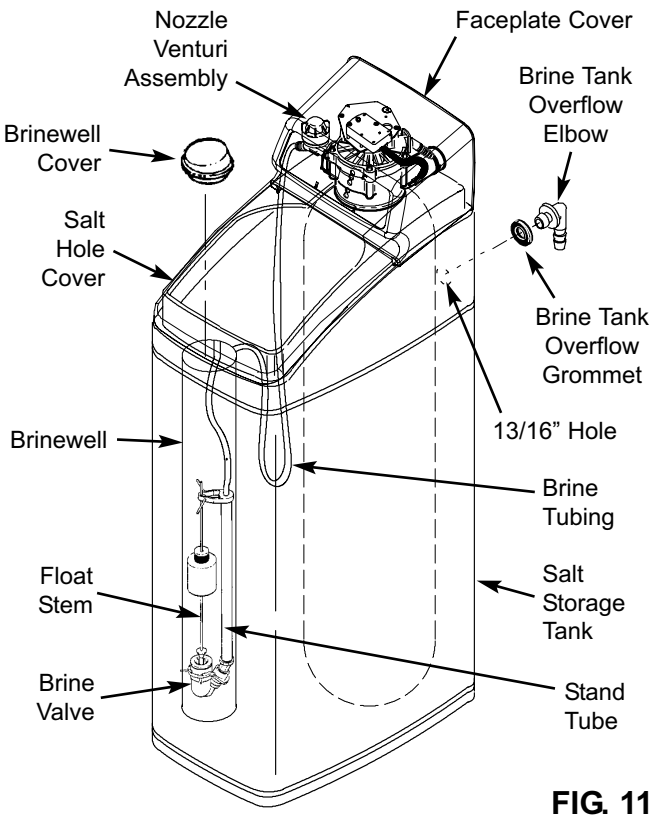

FIG. 11

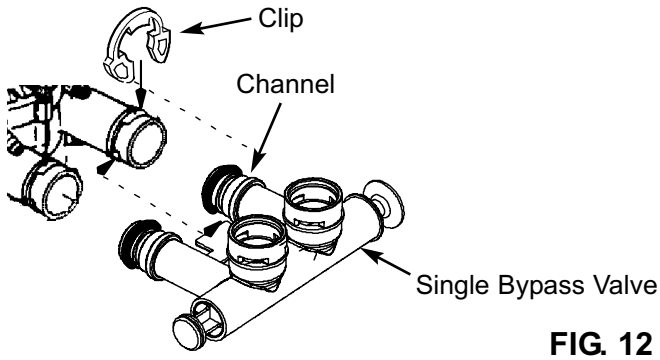

FIG. 12

Correct Assembly

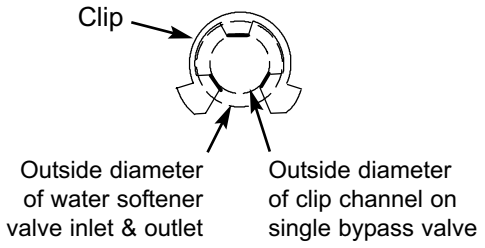

FIG. 13

NOTE: Be sure all 3 tabs of the clip go through the matching holes on the water softener valve inlet or outlet, and fully into the channel on the single bypass valve. Make sure that the tabs are fully seated.

Installation Instructions

Step 5. Cold Water Pipe Grounding

CAUTION: The house cold water pipe (metal only) is often used as a ground for the house electrical system, The 3-valve bypass type of installation, shown in Figure 9, will maintain ground continuity. If you use a plastic bypass valve at the unit, continuity is broken. To restore the ground, do the following:

1. Install a #4 copper wire across the removed section of main water pipe, securely clamping it at both ends (See Figure 14) - parts not included.

NOTE: Check local plumbing and electrical codes for proper installation of the ground wire. The installation must conform to them. In Massachusetts, plumbing codes of Massachusetts shall be conformed to. Consult with your licensed plumber.

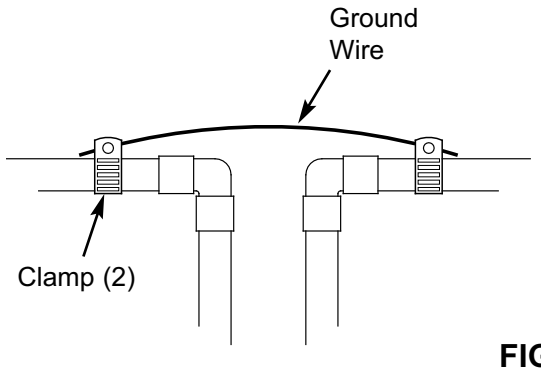

FIG. 14

Step 6. Install Valve Drain Hose

NOTE: See valve drain options on page 7.

1. Measure, cut to needed length and connect the 3/8" drain line (provided) to the water softener valve drain fitting. Use a hose clamp to hold the hose in place.

IMPORTANT: If codes require a rigid drain line see "Valve Drain requirements" section.

2. Run the drain hose or copper tubing to the floor drain. Secure drain hose. This will prevent "whipping" during regenerations. **Be sure to provide a 1-1/2" minimum air gap to prevent possible sewer water backup.** See "Air Gap Requirements" section.

NOTE: In addition to a floor drain, you can use a laundry tub or standpipe as a good drain point for this hose.. Avoid long drain hose runs, or elevating the hose more than 8' above the floor.

Step 7. Install Salt Storage Tank Overflow Hose

1. Measure, cut to needed length and connect the 3/8" drain line (provided) to the salt storage tank overflow elbow and secure in place with a hose clamp.

2 Run the hose to the floor drain, or other suitable drain point no higher than the drain fitting on the salt storage tank (This is a gravity drain). If the tank overfills with water, the excess water flows to the drain point. Cut the drain line to the desired length and route it neatly out of the way.

IMPORTANT: For proper operation of the water softener, do not connect the water softener valve drain tubing from Step 6 to the salt storage tank overflow hose.

Step 8. Pressure Testing for Leaks

To prevent air pressure in the water softener and plumbing system, do the following steps exactly in order:

1. Fully open two or more softened cold water faucets nearby the water softener, located downstream from the water softener.

2. Place the single bypass valve or 3 valve bypass in "bypass" position. See Figures 8 & 9.

3. Fully open the main water supply valve. Run water until there is a steady flow from the opened faucets, with no air bubbles.

4. Place bypass valve(s) in "service" or soft water position exactly as follows:

- Single bypass valve: Slowly move the valve stem toward "service," pausing several times to allow the water softener to fill with water.
- 3 valve bypass: Fully close the bypass valve and open the outlet valve. Slowly open the inlet valve, pausing several times to allow the water softener to fill with water.

5. After about three minutes, open a hot water faucet until there is a steady flow and there are no air bubbles, then close this faucet.

6. Close all cold water faucets and check for leaks at the plumbing connections that you made.

7. Check for leaks around clips at softener's inlet and outlet. If a leak occurs at a clip, depressurize the plumbing (turn off the water supply and open faucets) before removing clip. When removing clips at the softener's inlet or outlet, push the single

continued on next page

continued from previous page

bypass valve body toward the softener (See Figure 15). Improper removal may damage clips. Do not reinstall damaged clips.

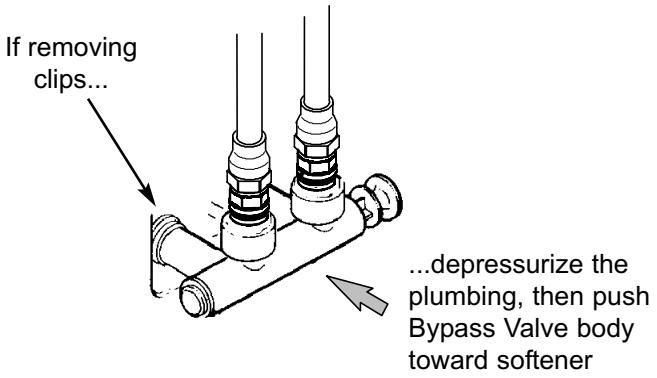

FIG. 15

Step 9. Add Water and Salt to the Salt Storage Tank

1. Using a container, add about three gallons of clean water into the salt storage tank.

2. Add Morton® System Saver® II Pellets to the storage tank.

NOTE: See Page 19 for additional information on salt.

Step 10. Plug in the Transformer

During installation, the water softener wiring may be moved or jostled from place. Check to be sure all leadwire connectors are secure on the back of the electronic board and be sure all wiring is away from the valve gear and motor area, which rotates during regenerations.

1. Plug the water softener into an electrical outlet that is not controlled by a switch and is approved by local codes. The unit works on 24V only. Do not connect without the transformer

Step 11. Program the Controller

1. Install the salt hole and faceplate covers.

2. Complete the programming steps on:

Pages 13 & 14 for Models MSD20F, MSD27B & MSD30D, or

Pages 16 & 17 for Model MSD34C.

Step 12. Sanitizing the Softener

Care is taken at the factory to keep your unit clean and sanitary. Materials used to make the unit will not infect or contaminate your water supply, and will not cause bacteria to form or grow. However, during shipping, storage, installation and operation, bacteria could get into the unit. For this reason, sanitizing as follows is suggested* when installing.

1. Open salt hole cover, remove the brinewell cover and pour about 3 oz. (6 tablespoons) of household bleach into the softener brinewell. Replace the brinewell cover.

2 Make sure the bypass valve(s) is in the “service” (open) position.

3 Start a recharge: Press the RECHARGE button and hold for 3 seconds, until “RECHARGE NOW” begins to flash in the display. This recharge draws the sanitizing bleach into and through the water softener. Any air remaining in the unit is purged to the drain.

4 After the recharge has completed, fully open a cold water faucet, downstream from the softener, and allow 50 gallons of water to pass through the system. This should take at least 20 minutes. Close the faucet.

*Recommended by the Water Quality Association. On some water supplies, the unit may need periodic disinfecting.

Step 13. Restart the Water Heater

Turn on the electricity or fuel supply to the water heater and relight the pilot, if applicable.

NOTE: The water heater is filled with hard water and, as hot water is used, it refills with conditioned water. In a few days, the hot water will be fully conditioned. To have fully conditioned hot water immediately, wait until the initial recharge (Step 12) is over. Then, drain the water heater (following instructions for water heater) until water runs cold.

Questions? Call Toll Free 1-888-64 WATER (1-888-649-2837) Monday- Friday, 8 AM - 7 PM EST
or visit www.systemsaver.com

When you call, please be prepared to provide the model and serial number, found on the rating decal, typically located inside the faceplate cover, near the back.

Programming the Water Softener
(Models MSD20F, MSD27B & MSD30D)

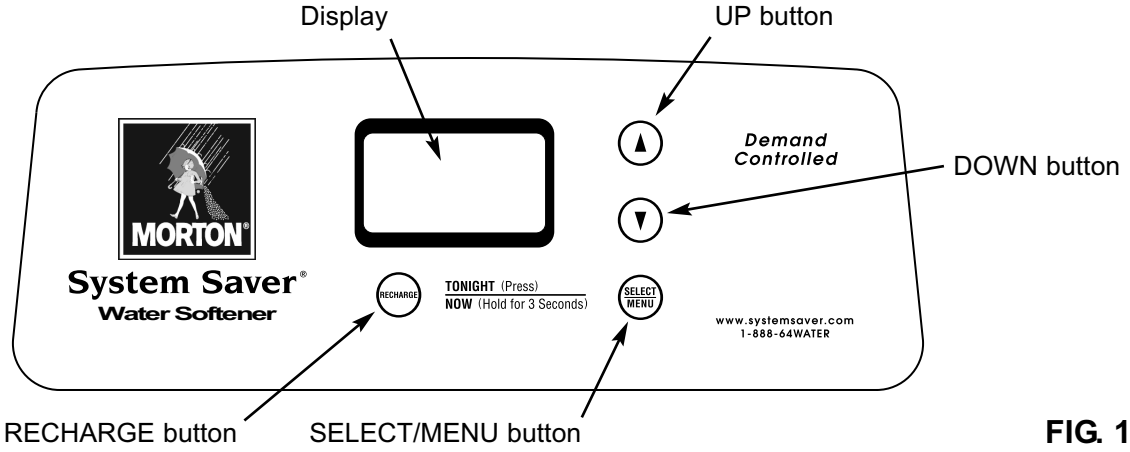

FIG. 17

When the transformer is plugged into the electrical outlet, a model code and a test number (example: J2.0), begin to flash in the faceplate display. Then, “12:00 PM” and the words “PRESENT TIME" begin to flash.

NOTE: If “- - - -” shows in the display, press the ▲ UP or ▼ DOWN button until the model code (“Sr19” for Model MSD20F, “Sr22” for Model MSD27B, “LE31” for Model MSD30D or “Sr28” for Model MSD34C) shows in the display. Then, press the SELECT / MENU button to set, and change to the flashing “PRESENT TIME" display.

Step 1. Set Time of Day

If the words “PRESENT TIME" do not show in the display, press the SELECT / MENU button until they do.

1. Press the ▲ UP or ▼ DOWN buttons to set the present time. Up moves the display ahead; down sets the time back. Be sure AM or PM is correct.

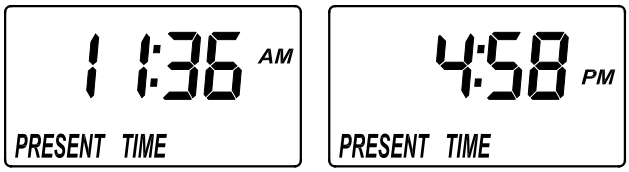

FIG. 16

NOTE: Press buttons and quickly release to slowly advance the display. Hold the buttons down for fast advance.

Step 2. Set Water Hardness Number

1. Press the SELECT / MENU button once again to display a flashing “25” and the word “HARDNESS”.

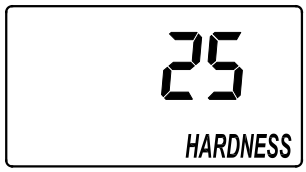

FIG. 18

2. Press the ▲ UP or ▼ DOWN buttons to set your water’s hardness number.

NOTE: If your water supply contains iron, compensate for it by adding to the water hardness number. For example, assume your water is 20 gpg hard and contains 2 ppm iron. Add 5 to the hardness number for each 1 ppm of iron. In this example, you would use 30 for your hardness number.

	20 gpg hardness
2 ppm iron x 5 = 10	+10
(times)	30 HARDNESS NUMBER

Programming the Water Softener
(Models MSD20F, MSD27B & MSD30D)

Step 3. Set Recharge (Regeneration) Time

Your demand water softener will automatically regenerate when it needs to, based on water usage. The time of day that the automatic recharge cycle begins may be changed as follows:

1. Press the SELECT / MENU button once again to display a flashing "2:00AM" and the words "RECHARGE TIME". This is a good time for the recharge to start in most households, because water is not in use.

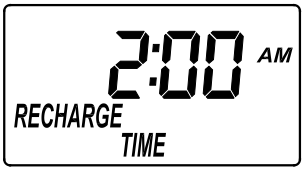

FIG. 19

2. If you want to change the recharge start time, press the ▲ UP or ▼ DOWN buttons until the desired time shows. Be sure AM or PM is correct.
3. Press the SELECT / MENU button once more to complete the initial programming. The current time of day will show in the display.

Step 4. Set Salt Efficiency

When this feature is ON, the water softener will operate at salt efficiencies of 4000 grains of hardness per pound of salt or higher (May recharge more often using smaller salt dosage and less water). The softener is shipped with this feature set OFF.

1. Press <u>and hold</u> the SELECT / MENU button until one of the screens in Figure 20 is displayed. Once in this display, press the SELECT / MENU button once and one of the two displays in Figure 21 is shown.

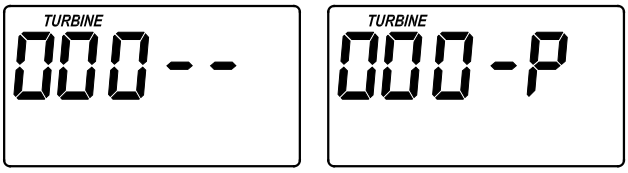

FIG. 20

2. Press the ▲ UP or ▼ DOWN buttons to set ON or OFF. When set to ON, the efficiency icon will be displayed in the upper right hand corner of the normal run display.

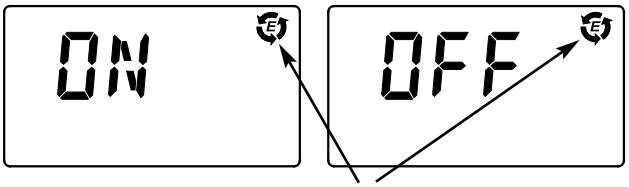

FIG. 21

3. Press the SELECT / MENU button three times, to return to the normal run display (See Figure 22).

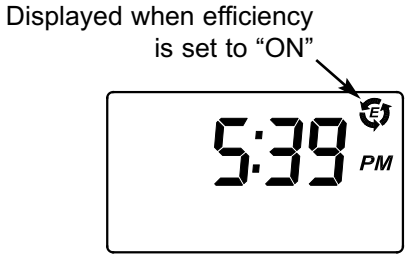

FIG. 22

California Efficiency Requirement

Your Morton Water Softener has a "High Efficiency" feature with an ON or OFF setting. This softener setting is shipped in the OFF position, which utilizes the maximum rated capacity while most often achieving maximum salt efficiencies. When installing this unit in the State of California, you MUST turn this setting to the ON position, which may initiate more frequent recharges. However it will operate at 4000 grains per pound of salt or higher.

If you wish to turn the Salt Efficiency feature ON (icon will show in the display), follow the instructions on this page.

Questions? Call Toll Free 1-888-64 WATER (1-888-649-2837) Monday- Friday, 8 AM - 7 PM EST
or visit www.systemsaver.com

When you call, please be prepared to provide the model and serial number, found on the rating decal, typically located inside the faceplate cover, near the back.

Customizing Features / Options
(Models MSD20F, MSD27B & MSD30D)

Recharge Now

At times of greater than normal water use, such as when you have guests, you could run out of conditioned water before the next scheduled recharge. If this happens, you may want to initiate an immediate regeneration, as follows:

1. Press and hold the RECHARGE button until the words “RECHARGE NOW" flash in the display.

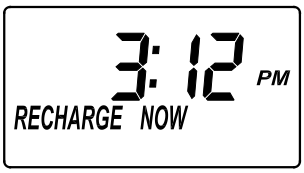

FIG. 23

RECHARGE NOW initiated

During the recharge cycle, the screen will flash “RECHARGE NOW”. When the recharge cycle is complete, full softened water capacity will be restored.

NOTE: Avoid using hot water while the softener is regenerating, because the water heater will refill with bypass hard water.

Recharge Tonight

If you do not want to start an immediate recharge, but would like to schedule an extra recharge at the next preset recharge time, do the following:

1. Press and release (do not hold) the RECHARGE button.

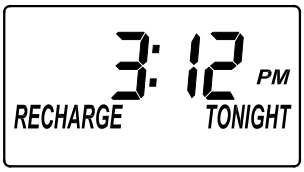

FIG. 24

RECHARGE TONIGHT initiated

The words “RECHARGE TONIGHT" flash in the display, and the softener will recharge at the next recharge time. The words “RECHARGE NOW" will flash during the regeneration. When completed, full water conditioning capacity is restored.

Adjustable Backwash

If your incoming water supply has higher sediments or clear water iron, a longer Backwash and/or Fast Rinse time may help in keeping the unit cleaner.

To change the length of the Backwash:

1. Press and hold the SELECT / MENU button until the screen in Figure 25 is displayed.

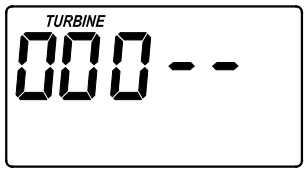

FIG. 25

2. Press the SELECT / MENU button twice, so that “bA TIME” appears in the display (See Figure 26).

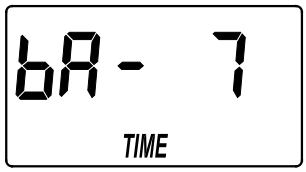

FIG. 26

3. Press the ▲ UP or ▼ DOWN buttons to set the length of Backwash in minutes.

4. When the desired Backwash time appears in the display, press the SELECT / MENU button twice to return to the normal run (time of day) screen.

Adjustable Fast Rinse

To change the length of the Fast Rinse:

1. Press and hold the SELECT / MENU button until the screen in Figure 25 is displayed.

2. Press the SELECT / MENU button three times, so that “Fr TIME” appears in the display (See Figure 27).

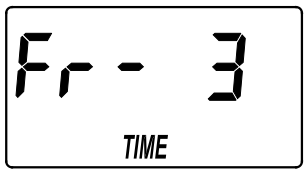

FIG. 27

3. Press the ▲ UP or ▼ DOWN buttons to set the length of Fast Rinse in minutes.

4. When the desired Fast Rinse time appears in the display, press the SELECT / MENU button once to return to the normal run (time of day) screen.

Programming the Water Softener (Model MSD34C)

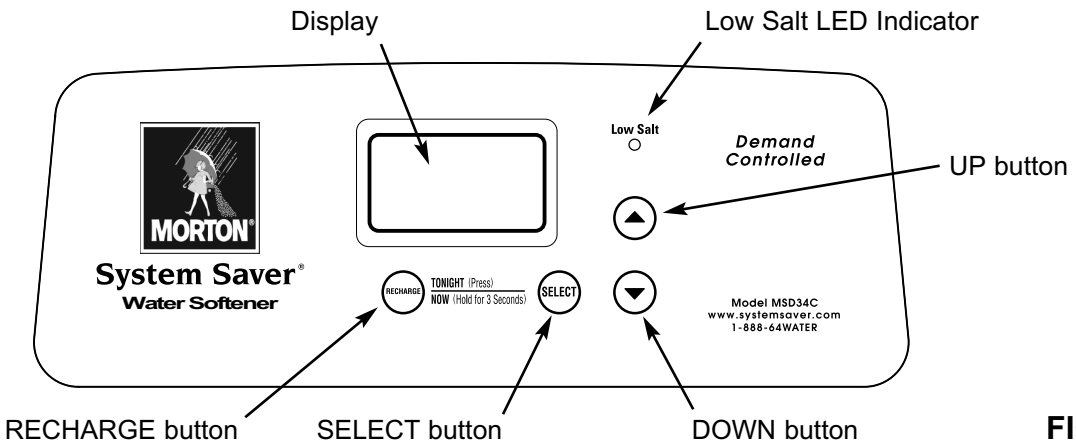

FIG. 29

When the transformer is plugged into the electrical outlet, a model code and a test number (example: J2.0), begin to flash in the faceplate display. Then, “12:00 PM” and the words “SET TIME" begin to flash.

NOTE: If “- - - -” shows in the display, press the ▲ UP or ▼ DOWN button until the model code (“Sr19” for Model MSD20F, “Sr22” for Model MSD27B, “LE31” for Model MSD30D or “Sr28” for Model MSD34C) shows in the display. Then, press the SELECT button to set, and change to the flashing “SET TIME" display.

Step 1. Set Time of Day

If the words “SET TIME" do not show in the display, press the SELECT button until they do.

1. Press the ▲ UP or ▼ DOWN buttons to set the present time. Up moves the display ahead; down sets the time back. Be sure AM or PM is correct.

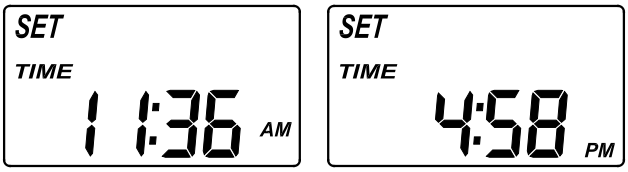

FIG. 28

NOTE: Press buttons and quickly release to slowly advance the display. Hold the buttons down for fast advance.

Step 2. Set Water Hardness Number

1. Press the SELECT button once again to display a flashing “25” and the words “SET HARDNESS”.

2. Press the ▲ UP or ▼ DOWN buttons to set your water’s hardness number.

FIG. 30

NOTE: If your water supply contains iron, compensate for it by adding to the water hardness number. For example, assume your water is 20 gpg hard and contains 2 ppm iron. Add 5 to the hardness number for each 1 ppm of iron. In this example, you would use 30 for your hardness number.

	20 gpg hardness
2 ppm iron x 5 = 10	+10
(times)	30 HARDNESS NUMBER

Step 3. Set Recharge (Regeneration) Time

Your demand water softener will automatically regenerate when it needs to, based on water usage. The time of day that the automatic recharge cycle begins may be changed as follows:

1. Press the SELECT button once again to display a flashing “2:00AM” and the words “SET RECHARGE TIME”. This is a good time for the recharge to start in most households, because water is not in use.

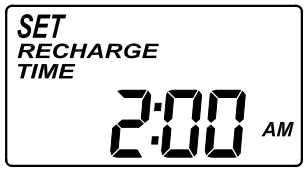

FIG. 31

2. If you want to change the recharge start time, press the ▲ UP or ▼ DOWN buttons until the desired time shows. Be sure AM or PM is correct.

Programming the Water Softener
(Model MSD34C)

Step 4. Set Salt Level

The water softener has a low salt indicator light to remind you to refill the storage tank with salt.

NOTE: You must set salt level each time salt is added to the water softener.

To set this monitor system:

1. Lift the salt hole cover and level the salt in the storage tank.

2. The yellow salt level decal, on the brinewell inside the tank, has numbers from 0 to 8. Observe the highest number the leveled salt is at, or closest to.

3. Press the SELECT button to display a flashing "OFF" and the words "SET SALT LEVEL".

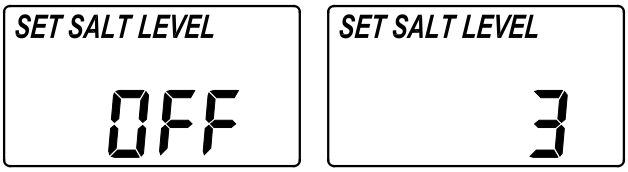

FIG. 32

4. Press the ▲ UP button until the number on the screen corresponds to the salt level. At level 2 or below, the "Low Salt" LED indicator will flash. If you wish to turn this feature off, press the ▼ DOWN button past 0, and the word "OFF" flashes in the display.

5. Press the SELECT button once more to complete the initial programming. The current time of day will show in the display.

Step 5. Set Salt Efficiency

When this feature is ON, the water softener will operate at salt efficiencies of 4000 grains of hardness per pound of salt or higher (May recharge more often using smaller salt dosage and less water). The softener is shipped with this feature set OFF.

1. Press <u>and hold</u> the SELECT button until one of the screens in Figure 33 is displayed. Once in this display, press the SELECT button once and one of the two displays in Figure 34 is shown.

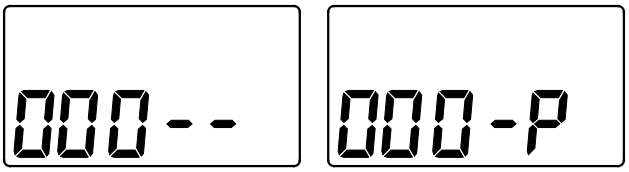

FIG. 33

2. Press the ▲ UP or ▼ DOWN buttons to set ON or OFF. When set to ON, the efficiency icon will be displayed on the right hand side of the normal run display.

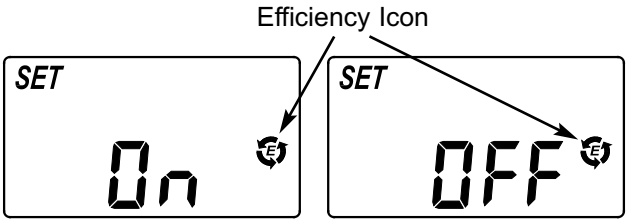

FIG. 34

3. Press the SELECT button three times, to return to the normal run display (See Figure 35).

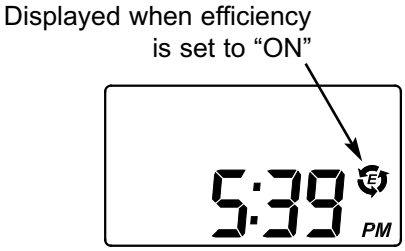

FIG. 35

California Efficiency Requirement

Your Morton Water Softener has a "High Efficiency" feature with an ON or OFF setting. This softener setting is shipped in the OFF position, which utilizes the maximum rated capacity while most often achieving maximum salt efficiencies. When installing this unit in the State of California, you MUST turn this setting to the ON position, which may initiate more frequent recharges. However it will operate at 4000 grains per pound of salt or higher.

If you wish to turn the Salt Efficiency feature ON (icon will show in the display), follow the instructions on this page.

Questions? Call Toll Free 1-888-64 WATER (1-888-649-2837) Monday- Friday, 8 AM - 7 PM EST
or visit www.systemsaver.com

When you call, please be prepared to provide the model and serial number, found on the rating decal, typically located inside the faceplate cover, near the back.

Customizing Features / Options
(Model MSD34C)

Recharge Now

At times of greater than normal water use, such as when you have guests, you could run out of conditioned water before the next scheduled recharge. If this happens, you may want to initiate an immediate regeneration, as follows:

1. Press and hold the RECHARGE button until the words “RECHARGE NOW" flash in the display.

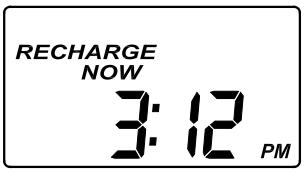

FIG. 36

RECHARGE NOW initiated

During the recharge cycle, the screen will flash “RECHARGE NOW”. When the recharge cycle is complete, full softened water capacity will be restored.

NOTE: Avoid using hot water while the softener is regenerating, because the water heater will refill with bypass hard water.

Recharge Tonight

If you do not want to start an immediate recharge, but would like to schedule an extra recharge at the next preset recharge time, do the following:

1. Press and release (do not hold) the RECHARGE button.

FIG. 37

RECHARGE TONIGHT initiated

The words “RECHARGE TONIGHT" flash in the display, and the softener will recharge at the next recharge time. The words “RECHARGE NOW" will flash during the regeneration. When completed, full water conditioning capacity is restored.

Adjustable Backwash

If your incoming water supply has higher sediments or clear water iron, a longer Backwash and/or Fast Rinse time may help in keeping the unit cleaner.

To change the length of the Backwash:

1. Press and hold the SELECT button until the screen in Figure 38 is displayed.

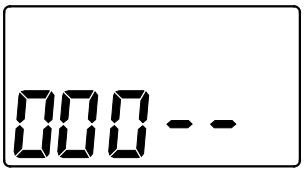

FIG. 38

2. Press the SELECT button twice, so that “SET bA TIME” appears in the display (See Figure 39).

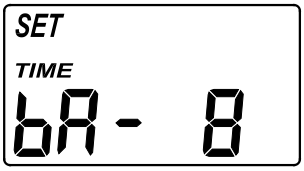

FIG. 39

3. Press the ▲ UP or ▼ DOWN buttons to set the length of Backwash in minutes.

4. When the desired Backwash time appears in the display, press the SELECT button twice to return to the normal run (time of day) screen.

Adjustable Fast Rinse

To change the length of the Fast Rinse:

1. Press and hold the SELECT button until the screen in Figure 38 is displayed.

2. Press the SELECT button three times, so that “SET Fr TIME” appears in the display (See Figure 40).

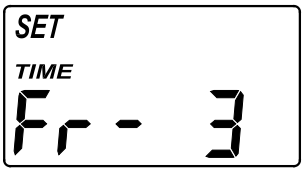

FIG. 40

3. Press the ▲ UP or ▼ DOWN buttons to set the length of Fast Rinse in minutes.

4. When the desired Fast Rinse time appears in the display, press the SELECT button once to return to the normal run (time of day) screen.

Customizing Features / Options
(All Models)

Power Outage Memory

If electrical power to the water softener is lost, “memory" built into the timer circuitry will keep all settings for several hours. While the power is out, the display is blank and the water softener will not regenerate. When electrical power is restored, the following will occur:

Reset the present time only if the display is flashing. The HARDNESS and RECHARGE TIME never require resetting unless a change is desired. Even if the clock is incorrect after a long power outage, the softener operates as it should to keep your water soft. However, regenerations may occur at the wrong time of day until you reset the clock to the correct time of day.

NOTE: If the water softener was regenerating when power was lost, it will now finish the cycle.

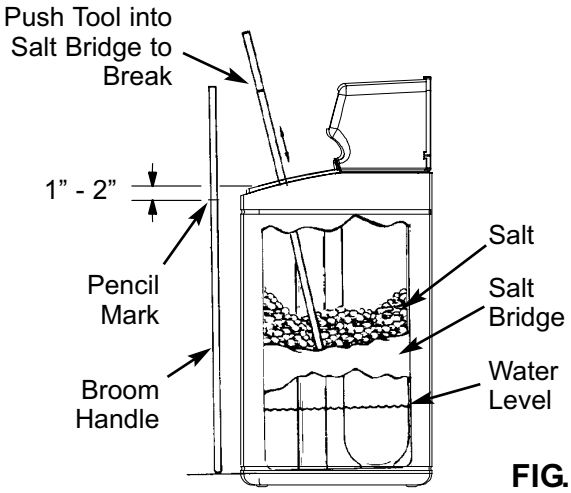

FIG. 41

Routine Maintenance

Refilling with Salt

Lift the salt hole cover and check the salt storage level frequently. If the water softener uses all the Morton® System Saver® II Pellets before you refill it, you will experience hard water. Until you have established a refilling routine, check the salt every two or three weeks. Always add if less than 1/4 full. Be sure the brinewell cover is on.

NOTE: In humid areas, it is best to keep the salt storage level lower, and to refill more often to avoid salt “bridging”.

Recommended Salt: We recommend using Morton® System Saver® II Pellets in the familiar yellow bag. For soft water, nothing works harder. Guaranteed®.

Salt Not Recommended: Rock salt, high in impurities, block, granulated, table, ice melting, ice cream making salts, etc., are not recommended.

Salt with Iron Removing Additives: Some salts have an additive to help a water conditioner handle iron in a water supply. For this we recommend Morton® Rust Remover Super Pellets® in the green bag.

Breaking a Salt Bridge

Sometimes, a hard crust or salt “bridge” forms in the brine tank. It is usually caused by high humidity or the wrong kind of salt. When the salt “bridges,” an empty space forms between the water and the salt. Then, salt will not dissolve in the water to make brine. Without brine, the resin bed is not recharged and hard water will result.

If the storage tank is full of salt, it is difficult to tell if you have a salt bridge. A bridge may be underneath loose salt. Take a broom handle, or like tool, and hold it next to the water softener. Measure the distance from the floor to the rim of the water softener. Then, carefully push the broom handle straight down into the salt. If a hard object is felt before the pencil mark is even with the top, it is most likely a salt bridge. Carefully push into the bridge in several places to break it. Do not use any sharp or pointed objects as you may puncture the brine tank. Do not try to break the salt bridge by pounding on the outside of the salt tank. You may damage the tank.

Routine Maintenance

Cleaning the Nozzle & Venturi

A clean nozzle & venturi (See Figure 42) is a necessity for the water softener to work properly. This small component creates the suction to move brine from the brine tank, into the resin tank. If it should become plugged with sand, silt, dirt, etc., the water softener will not work, and hard water will result.

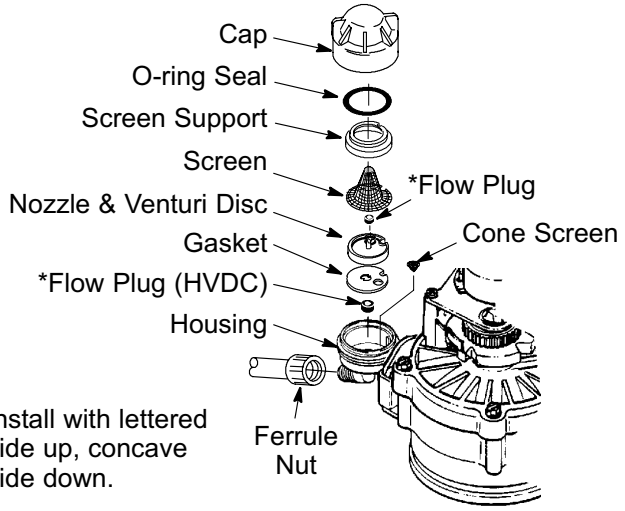

IMPORTANT: Be sure small hole in the gasket is centered directly over the small hole in the nozzle & venturi housing. Be sure the numbers are facing up

FIG. 42

To get access to the nozzle & venturi, remove the water softener's top cover. Put the bypass valve(s) into the bypass position. Be sure the water softener is in soft water (service) cycle (no water pressure at nozzle & venturi). Then, holding the nozzle & venturi housing with one hand, unscrew the cap. Do not lose the o-ring seal. Lift out the screen support and screen. Then, remove the nozzle & venturi disc, gasket and flow plug(s). Wash the parts in warm, soapy water and rinse in fresh water. Be sure to clean both the top and bottom of the nozzle & venturi disc. If needed, use a small brush to remove iron or dirt. Do not scratch, misshape, etc., surfaces of the nozzle & venturi.

Carefully replace all parts in the correct order. Lubricate the o-ring seal with silicone grease and locate in place. Install and tighten the cap by hand, while supporting the housing. Overtightening may break the cap or housing. Put the bypass valve(s) into service (soft water) position.

Recharge the softener to reduce water level in the tank. This will also assure that the softener is completely recharged and ready to provide softened water again. Check the water level in the tank by looking down the brinewell. If the water level does not drop after a recharge, the problem has not been resolved. Call 1-888-64 WATER, Monday - Friday, 8 am to 7 pm, EST, or visit www.systemsaver.com.

Protect the Water Softener from Freezing

If the softener is installed where it could freeze (summer cabin, lake home, etc.), you must drain all water from it to stop possible freeze damage. To drain the softener:

1. Close the shut-off valve on the house main water pipe, near the water meter or pressure tank.
2. Open a faucet in the soft water pipes to vent pressure in the softener.
3. Move the stem in the single bypass valve to bypass. Close the inlet and outlet valve in a 3 valve bypass system, and open the bypass valve. If you want water in the house pipes again, reopen the shut-off valve on the main water pipe.
4. Unplug the transformer at the wall outlet. Slide open the salt hole cover and remove the softener's top cover. Take off both drain hoses if they will interfere with moving the softener into position over the drain.
5. Carefully remove the large holding clips at the softener inlet and outlet. Separate the softener from the plastic installation adaptors, or from the bypass valve.
6. Lay a piece of 2 inch thick board near the floor drain (See Figure 43).
7. Move the softener close to the drain. Slowly and gently, tip it over until the rim rests on the wood block with the inlet and outlet over the drain. Do not allow the softener's weight to rest on the inlet and outlet fittings or they may break.
8. Tip the bottom of the softener up a few inches and hold until all water has drained. Leave the softener laying like this until you are ready to use it. Plug the inlet and outlet with clean rags to keep dirt, bugs, etc. out.

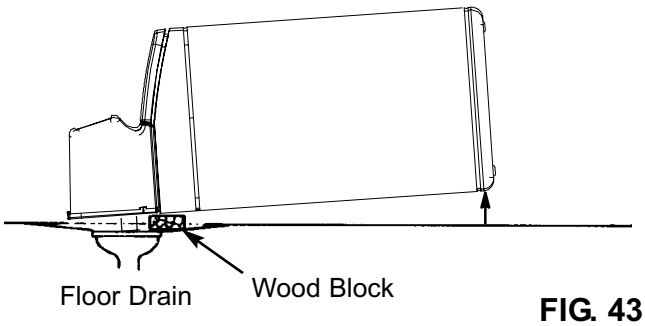

FIG. 43

Troubleshooting
(Models MSD20F, MSD27B & MSD30D)

Automatic Electronic Diagnostics

This water softener has a self-diagnostic function for the electrical system (except input power and/or water meter). The water softener monitors electronic components and circuits for correct operation. If a malfunction occurs, an error code appears in the display.

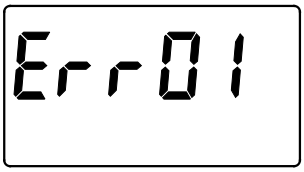

FIG. 44

While an error code appears in the display, all buttons are inoperable except the SELECT / MENU button. SELECT / MENU remains operational so the service person can perform the Manual Advance Diagnostics, see below, to further isolate the problem.

Procedure for removing error code from display:

1. Unplug transformer from electrical outlet.
2. Correct problem.
3. Plug in transformer.
4. Wait 8 minutes. The error code will return if the problem was not corrected.

Manual Advance Diagnostics

Use the following procedures to advance the water softener through the regeneration cycles to check operation.

Remove the top cover to expose the valve and observe cam and switch operation during valve rotation.

1. Press <u>and hold</u> SELECT / MENU for 3 seconds until “000” shows in the display, then release.
2. The 3 digits indicate water meter operation as follows:

   000 (steady) = Soft water not in use, and no flow through the meter.

   Open a nearby soft water faucet.

   000 to 199 (continual) = Repeats for each gallon of water passing through the meter.
3. The letter “P” and a dash (or dashes) indicate POSITION switch operation (See Figure 45). If the letter appears, the switch is closed. If the dash shows, the switch is open.

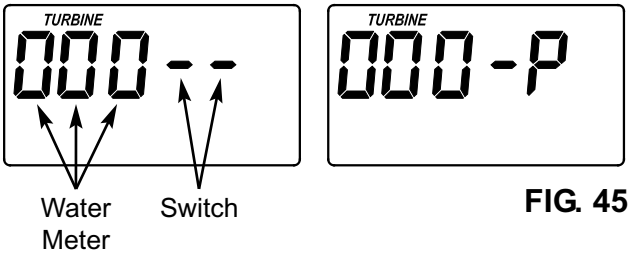

FIG. 45

4. Use the RECHARGE button to manually advance the valve into each cycle and check correct switch operation.

NOTE: Be sure water is in contact with the salt, and not separated by a salt bridge (See "Breaking A Salt Bridge" section).

5. While in this diagnostic screen, the following information is available and may be beneficial for various reasons. This information is retained by the computer from the first time electrical power is applied to the electronic controller.

   a. Press the ▲ UP button to display the number of days this electronic control has had electrical power applied.

   b. Press the ▼ DOWN button to display the number of regenerations initiated by this electronic control since the code number was entered.
6. Press and hold the SELECT / MENU button until the model code (“Sr19” for Model MSD20F, “Sr22” for Model MSD27B, “LE31” for Model MSD30D or “Sr28” for Model MSD34C) shows in the display. This code identifies the softener model. If an incorrect model code is displayed, the softener will operate on incorrect configuration data.

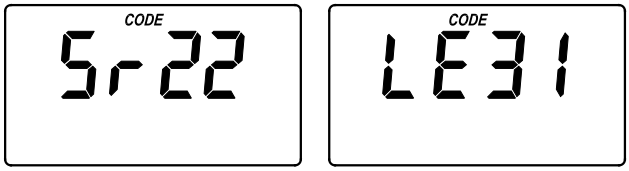

FIG. 46

7. To change the code number, press the ▲ UP or ▼ DOWN button until the correct code shows.
8. To return to the present time display, press the SELECT / MENU button.

Troubleshooting
(Model MSD34C)

Automatic Electronic Diagnostics

This water softener has a self-diagnostic function for the electrical system (except input power and/or water meter). The water softener monitors electronic components and circuits for correct operation. If a malfunction occurs, an error code appears in the display.

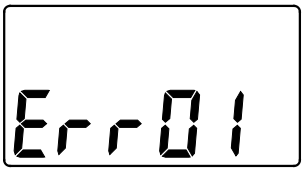

FIG. 47

While an error code appears in the display, all buttons are inoperable except the SELECT button. SELECT remains operational so the service person can perform the Manual Advance Diagnostics, see below, to further isolate the problem.

Procedure for removing error code from display:

1. Unplug transformer from electrical outlet.
2. Correct problem.
3. Plug in transformer.
4. Wait 6 minutes. The error code will return if the problem was not corrected.

Manual Advance Diagnostics

Use the following procedures to advance the water softener through the regeneration cycles to check operation.

Remove the top cover to expose the valve and observe cam and switch operation during valve rotation.

1. Press and hold SELECT for 3 seconds until “000” shows in the display, then release.
2. The 3 digits indicate water meter operation as follows:

   000 (steady) = Soft water not in use, and no flow through the meter.

   Open a nearby soft water faucet.

   000 to 199 (continual) = Repeats for each gallon of water passing through the meter.
3. The letter “P” and a dash (or dashes) indicate POSITION switch operation (See Figure 48). If the letter appears, the switch is closed. If the dash shows, the switch is open.

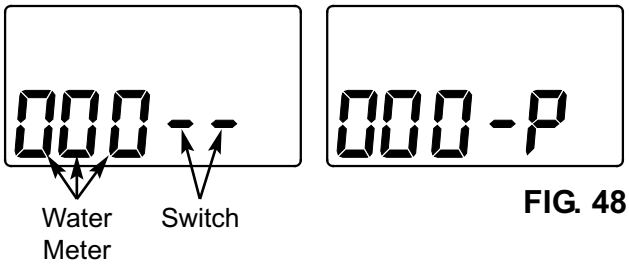

FIG. 48

4. Use the RECHARGE button to manually advance the valve into each cycle and check correct switch operation.

NOTE: Be sure water is in contact with the salt, and not separated by a salt bridge (See "Breaking A Salt Bridge" section).

5. While in this diagnostic screen, the following information is available and may be beneficial for various reasons. This information is retained by the computer from the first time electrical power is applied to the electronic controller.

   a. Press the ▲ UP button to display the number of days this electronic control has had electrical power applied.

   b. Press the ▼ DOWN button to display the number of regenerations initiated by this electronic control since the code number was entered.
6. Press and hold the SELECT button until the model code (“Sr19” for Model MSD20F, “Sr22” for Model MSD27B, “LE31” for Model MSD30D or “Sr28” for Model MSD34C) shows in the display. This code identifies the softener model. If an incorrect model code is displayed, the softener will operate on incorrect configuration data.

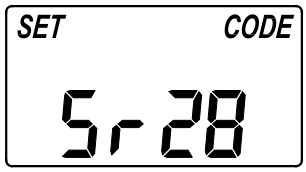

FIG. 49

7. To change the code number, press the ▲ UP or ▼ DOWN button until the correct code shows.
8. To return to the present time display, press the SELECT button.

Troubleshooting
(all Models)

Resetting to Factory Defaults

To reset the electronic controller to its factory default for all settings (time, hardness, etc.):

1. Press the SELECT or SELECT / MENU button and hold it until the display changes twice to show "CODE" and the flashing model code.

2. Press the ▲ UP button (a few times, if necessary) to display a flashing "SoS".

Models MSD20F, MSD27B & MSD30D

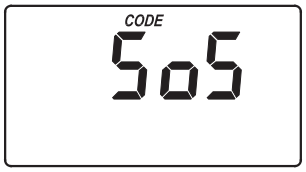

Model MSD34C

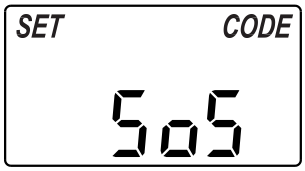

FIG. 50

3. Press the SELECT or SELECT / MENU button, and the electronic controller will restart.

4. Set the present time, hardness, etc., as described on pages 13 & 14 (for Models MSD20F, MSD27B & MSD30D) or pages 16 & 17 (for Model MSD34C).

Manual Advance Regeneration Check

This check verifies proper operation of the valve motor, brine tank fill, brine draw, regeneration flow rates, and other controller functions. Always make the initial checks, and the manual initiated diagnostics.

NOTE: The electronic control display must show a steady time (not flashing). If an error code shows, first press the SELECT or SELECT / MENU button to enter the diagnostic display.

1. Press the RECHARGE button <u>and hold</u> in for 3 seconds. RECHARGE begins to flash as the softener's valve advances from the service to fill position. Remove the brinewell cover and, using a flashlight, observe fill water entering the tank.

If water does not enter the tank, look for an obstructed nozzle, venturi, fill flow plug, brine tubing, or brine valve riser pipe.

2. After observing fill, press the RECHARGE button to move the softener's valve into the brine position. A slow flow of water to the drain will begin. Verify brine draw from the brine tank by shining a flashlight into the brinewell and observing a noticeable drop in the liquid level. This may take 15 to 20 minutes.

NOTE: Be sure water is in contact with the salt, and not separated by a salt bridge (See "Breaking A Salt Bridge" section).

If the water softener does not draw brine, check for (most likely to least likely):

- Dirty or plugged nozzle and venturi, see "Cleaning the Nozzle and Venturi" section.
- Nozzle and venturi not seated on the gasket, or gasket deformed.
- Valve seals leaking.
- Restriction in valve drain, causing a back-pressure (bends, kinks, elevated too high, etc.). See "Install Valve Drain Hose" section.
- Obstruction in brine valve or brine tubing.

NOTE: If water system pressure is low, an elevated drain hose may cause back pressure, stopping brine draw.

3. Press the RECHARGE button to move the softener's valve into the backwash position. Look for a fast flow of water from the drain hose. Check that the drain can adequately handle the flow and volume.

An obstructed flow indicates a plugged top distributor, backwash flow plug, or drain hose.

4. Press the RECHARGE button to move the softener's valve into the fast rinse position. Again look for a fast drain flow. Allow the softener to rinse for a few minutes to flush out any brine that may remain in the resin tank from the brining cycle test.

5. To return the softener's valve to the service position, press the RECHARGE button.

Need help troubleshooting? Call Toll Free 1-888-64 WATER (1-888-649-2837)

Monday- Friday, 8 AM - 7 PM EST **or visit www.systemsaver.com**

When you call, please be prepared to provide the model and serial number, found on the rating decal, typically located inside the faceplate cover, near the back.

Softener Parts List

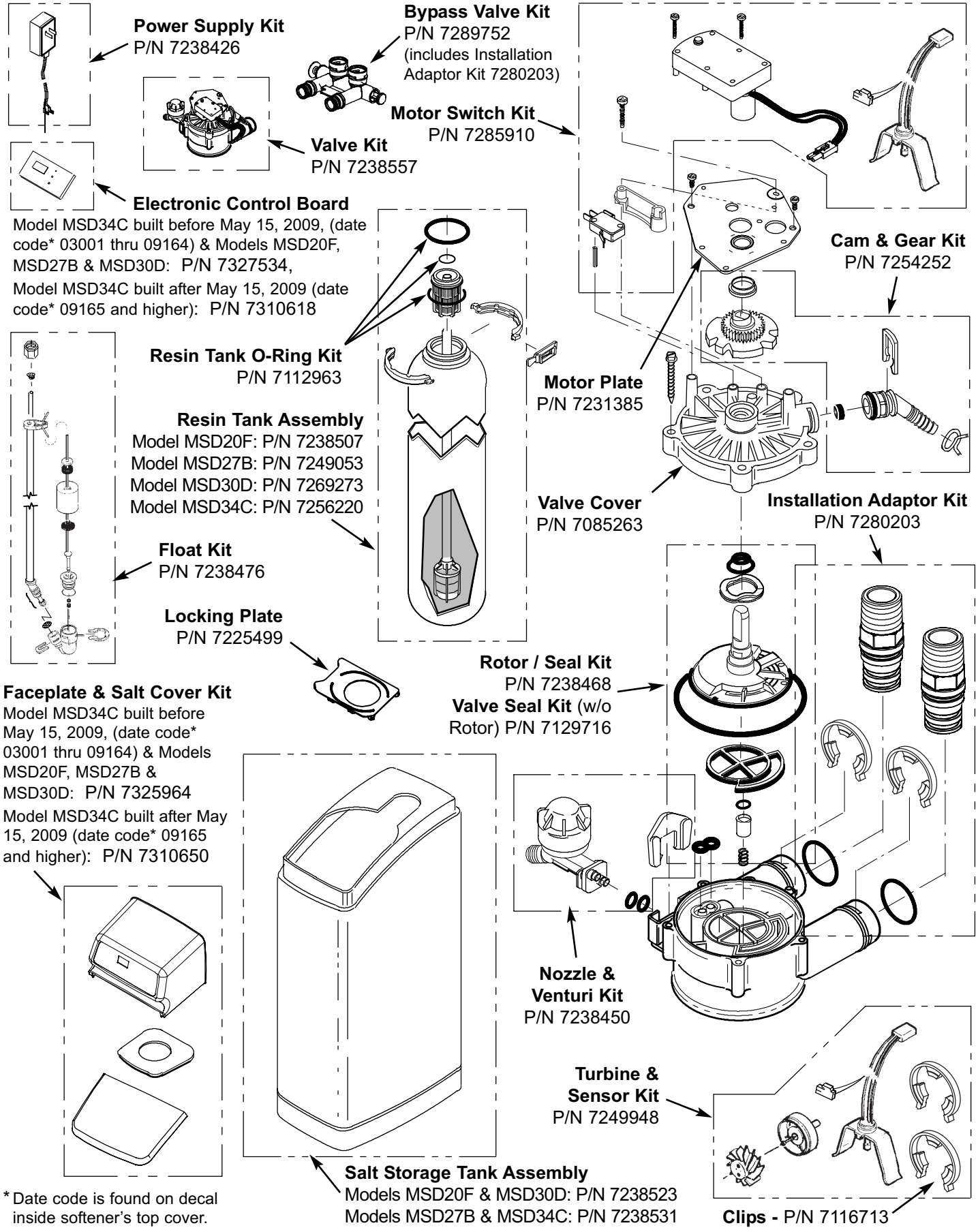

* Date code is found on decal inside softener's top cover.