MORTON™
SYSTEM SAVER™
WATER SOFTENER

Model MSD27B
Model MSD30D
Model MSD34C

How to maintain and operate your Demand Controlled Water Softener

DO NOT RETURN TO STORE

If you have questions or concerns when installing, operating or maintaining your softener, visit www.systemsaver.com or call our toll free number:

888-64 WATER

888-649-2837

Installation and Operation Manual

For best results use Morton® System Saver® Pellets in your softener.

7268861 (Rev. B 6/15/04)

For best results use Morton® System Saver® Pellets to Soften Your Water

Morton System Saver Pellets Make a Big Difference in Your Water

Morton® System Saver® Pellets are specially formulated to consistently outperform other water softening salts in all water softeners. System Saver® Pellets enable your water softener to remove almost twice as much dirt and impurities and up to 5% more minerals from your water than plain salt pellets. And that can mean a big difference in the quality of your water.

Morton System Saver Pellets Make a Difference in Your Water Softener, Too.

Hard water contains traces of dirt, iron and other minerals that can build up in the resin and valves of your water softener. That can lead to expensive repairs. But Morton® System Saver® Pellets are specially formulated to clean out those traces of dirt and minerals and to help keep your softener clean and problem free - longer than all other salt pellets. System Saver® Pellets are formulated with salt that is guaranteed 99.5% pure and contains virtually no insolubles that need to be cleaned from your brine tank. For these reasons, Morton backs System Saver® Pellets with a total satisfaction guarantee.

With Morton, Your Soft Water Solution is in the Bag

Morton® System Saver® Pellets come in a handy yellow 40-lb. bag that's easy to lift, carry, open and pour. The easy-open pull-tab opens just wide enough to allow salt to pour out easily, yet enables you to regulate the flow. And the sturdy handle makes it easy for you to carry.

Table of Contents

Unpacking and Inspection 4
Dimensions/Specifications 5
Wiring Schematic 5
Miscellaneous Service Information 6
Salt Storage Capacities 6
Safety Guides 7
Water Conditioning Information 7
Water Conditioning 7
Assembly 9
Planning Installation 10
Inlet – Outlet Plumbing Options 10
Other Requirements 11
Tools and Materials You May Need 11
Select Installation Location 12
Optional Weather Protection 13
Installation 13
Step 1. Turn Off Water Supply 13
Step 2. Move the Unit into Place 13
Step 3. Assemble Inlet and Outlet Plumbing 14
Step 4. Connect Inlet and Outlet Plumbing 14
Step 5. Cold Water Pipe Grounding 15
Step 6. Install Valve Drain Hose 15
Step 7. Install Salt Storage Tank Overflow Hose 15
Step 8. Pressure Testing for Leaks 16
Step 9. Add Water and Salt to the Salt Storage Tank 16
Step 10. Sanitizing the Softener 16
Step 11. Connect Transformer 17
Step 12. Install the Salt Hole and Faceplate Cover(s). 17
Step 13. Start a Recharge 17
Step 14. Restart the Water Heater 17
Programming the Faceplate Timer 18
Step 1. Set Time of Day 18
Step 2. Set Water Hardness Number 19
Step 3. Set Recharge (Regeneration) Time 19
Step 4. Set Salt Efficiency 20
Customizing Features/Options 21
Recharge Now 21
Recharge Tonight 21
Timer ‘‘Power–Outage Memory’’ 21
Routine Maintenance 22
Adding Salt 22
Breaking A Salt Bridge 22
Cleaning the Nozzle and Venturi 23
Protect the Water Softener from Freezing 24
Troubleshooting Guide 25
Automatic Electronic Diagnostics 26
Manual Advance Diagnostics 26
Manual Advance Regeneration Check 27
Softener Components 29
Warranty 31

Unpacking and Inspection

The parts required to assemble and install the unit are included in a parts bag.

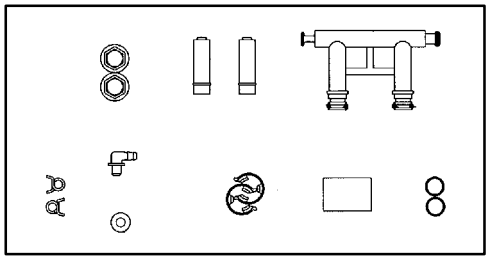

Thoroughly check the unit for possible shipping damage and parts loss. Also inspect and note any damage to the shipping carton.

Remove and discard (RECYCLE) all packing materials. To avoid loss of small parts, we suggest you keep the small parts in the parts bag until you are ready to use them.

DO NOT RETURN TO STORE

If you have any questions, missing parts or damage, please call 1–888–64WATER or 1–888–649–2837.

Before you call please have your model number, date of purchase, water conditions and number of people in your home.

For more installation or service information visit www.systemsaver.com.

FOR FUTURE REFERENCE, ENTER THE FOLLOWING INFORMATION

MODEL NO. ❶ ❷ _____ SERIAL NO. ❶ ❷ _____

CODE ❶ _____ INSTALLATION DATE _____

WATER HARDNESS _____ GPG IRON CONTENT _____ PPM

❶ on registration decal ❷ on shipping carton

Dimensions/Specifications

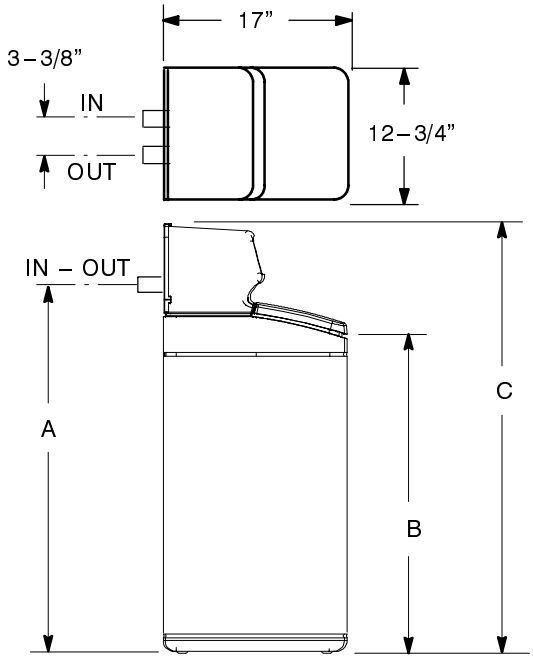

MODEL	NOMINAL RESIN TANK SIZE	A	B	C
MSD27B	8” DIA. X 40”	41 – 1/2”	37 – 1/2”	47”
MSD30D	9” DIA. X 35”	37”	33”	42”
MSD34C	9” DIA. X 40”	41 – 1/2”	37 – 1/2”	47”

Wiring Schematic

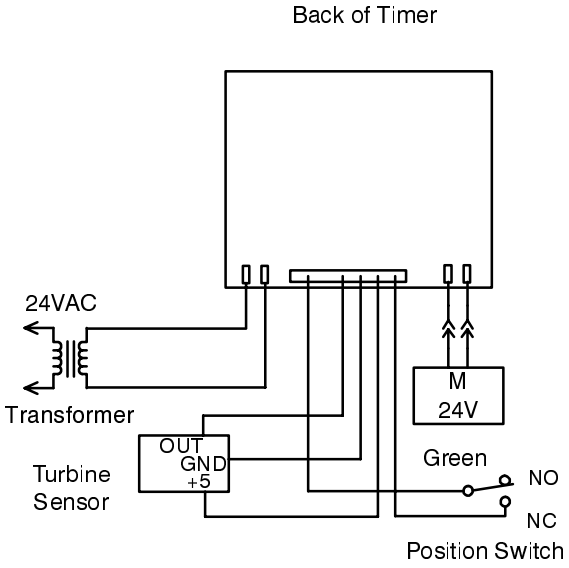

Miscellaneous Service Information

DESIGN SPECIFICATION		MSD27B	MSD30D	MSD34C
FILL CYCLE	❶ FLOW	.3 gpm	.3 gpm	.3 gpm
BRINE CYCLE	❷ FLOW	.15 gpm	.22 gpm	.15 gpm
BRINE RINSE CYCLE	❷ FLOW	.10 gpm	.15 gpm	.10 gpm
BACKWASH CYCLE (MAX.)	❷ FLOW	2.2 gpm	2.2 gpm	2.2 gpm
FAST RINSE CYCLE (MAX.)	❷ FLOW	2.2 gpm	2.2 gpm	2.2 gpm

❶ gallon per minute flow to brine tank

❷ gallon per minute flow to drain

Salt Storage Capacities

MSD27B - 175 lbs.
MSD30D - 150 lbs.
MSD34C - 175 lbs.

Product Specifications

	MSD27B	MSD30D	MSD34C
Rated Service Flow Rate (gpm)	8.0	8.3	9.0
Amount of High Capacity Resin (cu ft)	.72	.82	.91
Pressure Drop at Rated Service Flow (psig)	14	15	15
Water Supply Max. Hardness (gpg)	95	95	110
Water Supply Max. Clear Water Iron (ppm)	7	8	9
Water Pressure Limits (min./max. psi)	20 – 125	20 – 125	20 – 125
Min. – Max. Water Temperature (˚F)	40 – 120	40 – 120	40 – 120
Min. Water Supply Flow Rate (gpm)	3	3	3
Max. Drain Flow Rate (gpm)	2.2	2.2	2.2

Performance Claims

	MSD27B	MSD30D	MSD34C
Rated Softening Capacity (Grains/ Pounds of Salt)	10,900 @ 2.2 18,300 @ 4.3 24,600 @ 7.9 27,100 @ 11.5	13,500 @ 2.5 20,400 @ 4.9 26,800 @ 9.0 30,100 @ 13.1	13,800 @ 2.7 23,100 @ 5.5 31,100 @ 10.0 34,200 @ 14.6
Rated Efficiency (Grains/Pounds of Salt @ Minimum Salt Dose	5060 @2.2 lbs.	5060 @2.5 lbs.	5060 @2.7 lbs.

These systems conform to NSF/ANSI 44 for the specific performance claims as verified and substantiated by test data.

The efficiency rating is only valid at the stated salt dose. These softeners were efficiency rated according to NSF/ANSI Standard 44.

Safety Guides

Follow the installation instructions carefully. **(Failure to install the unit properly voids the warranty.)**

Before you begin installation, read this entire manual. Then, obtain all the materials and tools you will need to make the installation.

Check local plumbing and electrical codes. The installation must conform to them. Codes in the state of Massachusetts require installation by a licensed plumber. For installation, use plumbing code 248-CMR of the Commonwealth of Massachusetts.

Use only lead-free solder and flux for all sweat-solder connections, as required by state and federal codes.

Use care when handling the unit. Do not turn upside down, drop, or set on sharp protrusions.

Do not locate the unit where freezing temperatures occur. Do not attempt to treat water over 120°F. **Freezing, or hot water damage voids the warranty.**

Avoid installing in direct sunlight. Excessive sun heat may cause distortion or other damage to non-metallic parts.

The unit requires a minimum water flow of 3 gallons per minute at the inlet. **Maximum allowable inlet water pressure is 125 psi.** If daytime pressure is over 80 psi, nighttime pressure may exceed the maximum. Use a pressure reducing valve if necessary. (Adding a pressure reducing valve may reduce the flow.)

The unit works on 24 volt-60 hz electrical power only. Be sure to use the included transformer and plug it into a nominal 120V, 60 cycle household outlet that is grounded and properly protected by an overcurrent device such as a circuit breaker or fuse. If transformer is replaced, use only the authorized service, Class II, 24V 10VA transformer.

This system is not intended to be used for treating water that is microbiologically unsafe or of unknown quality without adequate disinfection before or after the system.

For California installations the Salt Efficiency setting must be set to “ON”.

Water Conditioning Information

Water Conditioning

Water conditioning is the treatment of four general conditions. These are:

1. HARDNESS
2. IRON
3. ACIDITY
4. SEDIMENTS

1. ***HARDNESS*** is a term to describe the presence of calcium and magnesium minerals in water. A chemical analysis accurately measures the amount of minerals in grain weight. For example, one gallon of water with 5 grains per gallon (gpg) hardness has dissolved minerals, that if solidified, about equals the size of one ordinary aspirin tablet. One gallon of water, 25 gpg hard, has a mineral content equal in size to 5 aspirin tablets. Water hardness varies greatly across the country. It generally contains from 3 to 100 gpg.

   Hard water affects living in general. Hardness minerals combine with soap to make a soap curd. The curd greatly reduces the cleaning action of soap. Precipitated hardness minerals form a crust on cooking utensils, appliances, and plumbing fixtures. Even the tastes of foods are affected. A water softener removes the hardness minerals to eliminate these problems, and others.

   Sodium Information: Water softeners using sodium chloride (salt) for regeneration add sodium to the water. Persons on sodium restricted diets should consider the added sodium as part of their overall intake.

2. ***IRON*** in water is measured in parts per million (ppm). The total* ppm of iron, and type or types*, is determined by chemical analysis. Four different types of iron in water are:

   ❶ Ferrous (clear water),

   ❷ Ferric (red water),

   ❸ Bacterial and organically bound iron,

   ❹ Colloidal and inorganically bound iron (ferrous or ferric).

   *Water may contain one or more of the four types of iron and any combination of these. Total iron is the sum of the contents.

   ❶ Ferrous (clear water) iron is soluble and dissolves in water. It is usually detected by taking a sample of water in a clear bottle or glass. Immediately after taking, the sample is clear. As the water sample stands, it gradually clouds and turns slightly yellow or brown as air oxidizes the iron. This usually occurs in 15 to 30 minutes. **This unit will remove moderate amounts of this type of iron (see specifications).**

   When using the softener to remove Ferrous (clear water) iron, add 5 grains to the hardness setting for every 1 ppm of Ferrous (clear water) iron.

   ❷ Ferric (red water), and ❸ Bacterial and organically bound irons are insoluble. This iron is visible immediately when drawn from a faucet because it has oxidized before reaching the home. It appears as small cloudy yellow, orange, or reddish suspended particles. After the water stands for a period of time, the particles settle to the bottom of the container. Generally these irons are removed from water by filtration. Chlorination is also recommended for bacterial iron. **This unit will not remove ferric or bacterial iron.**

   ❹ Colloidal and inorganically bound iron is of ferric or ferrous form that will not filter or exchange out of water. In some instances, treatment may improve colloidal iron water, but always CONSULT A QUALIFIED WATER CHEMISTRY LAB before attempting to treat it. Colloidal iron water usually has a yellow appearance when drawn. After standing for several hours, the color persists and the iron does not settle, but remains suspended in the water.

   Iron in water causes stains on clothing and plumbing fixtures. It negatively affects the taste of food, drinking water, and other beverages. **This unit will not remove colloidal iron.**

3. ***ACIDITY*** or acid water is caused by carbon dioxide, hydrogen sulfide, and sometimes industrial wastes. It is corrosive to plumbing, plumbing fixtures, water heaters, and other water using appliances. In can also damage and cause premature failure of seals, diaphragms, etc., in water handling equipment.

   A chemical analysis is needed to measure the degree of acidity in water. This is called the pH of water. Water testing below 6.9 pH is acidic. The lower the pH reading, the greater the acidity. A neutralizer filter or a chemical feed pump are usually recommended to treat acid water.

4. ***SEDIMENT*** is fine, foreign material particles suspended in water. This material is most often clay or silt. Extreme amounts of sediment may give the water a cloudy appearance. **A sediment filter installed ahead of the water softener normally corrects this situation.**

Assembly

1. Morton™ System Saver™ models are factory assembled. During installation, remove the Salt Hole Cover. Set aside to prevent damage. Check the brinewell to be sure it is secured and vertical (see Figure 1). Slide Faceplate Cover forward to expose back valve assembly.
2. Lift the brine valve out of the brinewell. Be sure the float stem is parallel to stand tube so seals will seat properly during operation. Replace the brine valve in the brinewell bottom and install the Brinewell Cover.
3. Install the brine tank overflow grommet and elbow in the 13/16” diameter hole in the back of the salt storage tank sidewall.

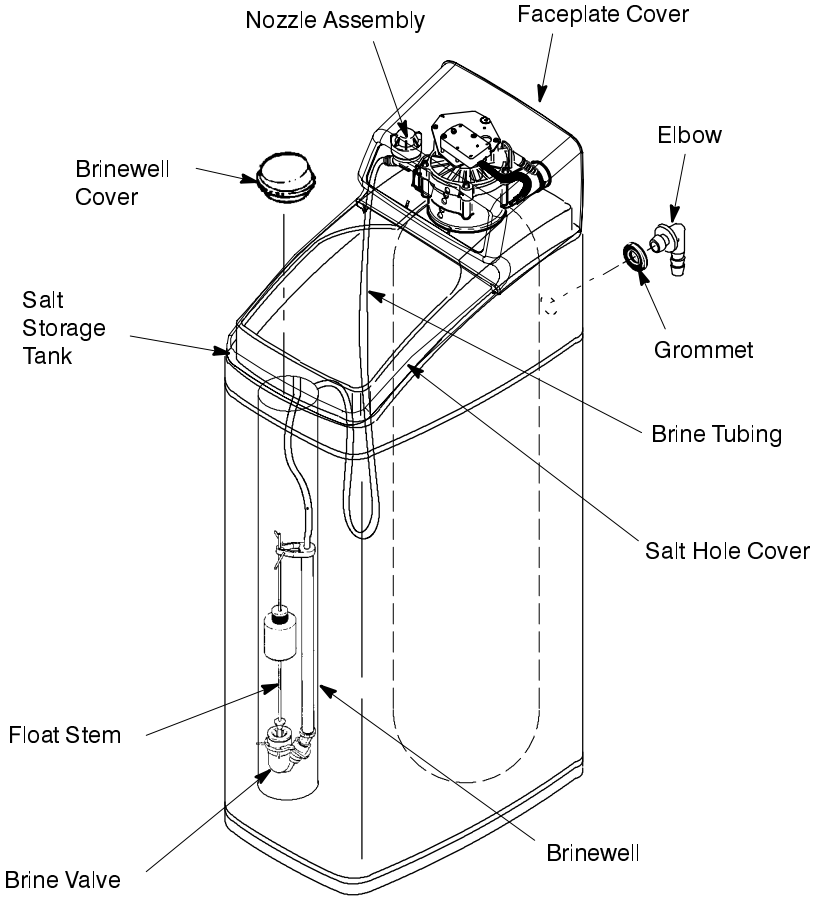

Figure 1

Planning Installation

Inlet – Outlet Plumbing Options

- **ALWAYS INSTALL** either a single bypass valve (included) or a *3 valve bypass system (not included). Bypass valves allow you to turn off water to the softener for repairs if needed, but still have water in house pipes.
- Use 3/4” (minimum) pipe and fittings.
- Use sweat copper... or, threaded pipe... or, PVC plastic pipe... or, other approved plumbing.

NOTE: *If you choose to install a 3 valve bypass, you will still need to use the included bypass valve to connect to the softener.

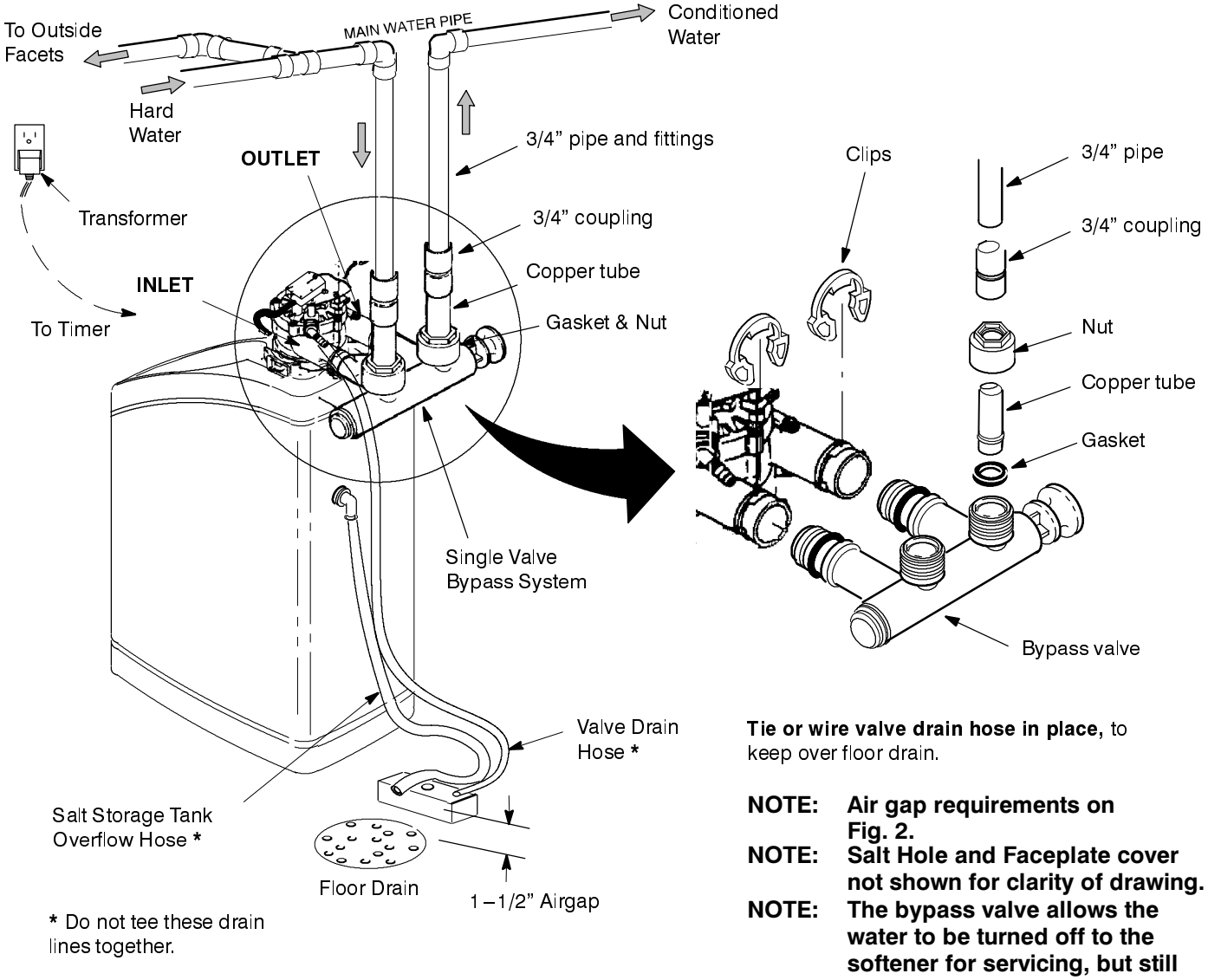

Tie or wire valve drain hose in place, to keep over floor drain.

NOTE: Air gap requirements on Fig. 2.

NOTE: Salt Hole and Faceplate cover not shown for clarity of drawing.

NOTE: The bypass valve allows the water to be turned off to the softener for servicing, but still have water in the house pipes.

Figure 2

Other Requirements

- A 120V-60Hz, grounded electrical outlet (continuously "live") is needed within 10' of the unit.
- A drain is needed for regeneration discharge water. A floor drain, close to the unit, is preferred. A laundry tub, standpipe, etc., are other drain options.

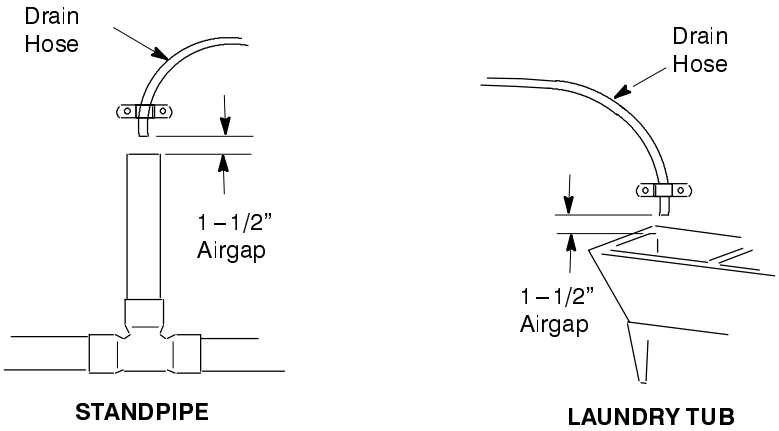

Figure 3

Tools and Materials You May Need

- Common Screwdriver
- Pliers
- Tape Measure
- Pipe and fittings as required

Soldered Copper

- Tubing cutter
- Propane torch
- Misc. fittings
- LEAD-FREE solder and flux
- Emery cloth, sandpaper or steel wool

Threaded

- Pipe cutter or hacksaw
- Threading tool
- Pipe joint compound*
- Misc. fittings

CPVC Plastic

- Pipe cutter
- Hacksaw
- Adjustable wrench
- Solvent cement*
- Primer
- Misc. fittings

NOTE: The salt storage tank drain elbow accepts either 1/2" or 3/8" I. D. hose.

***VALVE DRAIN OPTIONS:** Flexible drain hose is not allowed in all localities (check your plumbing codes). For a rigid valve drain run, cut the barbed section off the drain fitting for access to the 1/4" pipe threads. Then plumb a rigid drain as needed (see Figure 4).

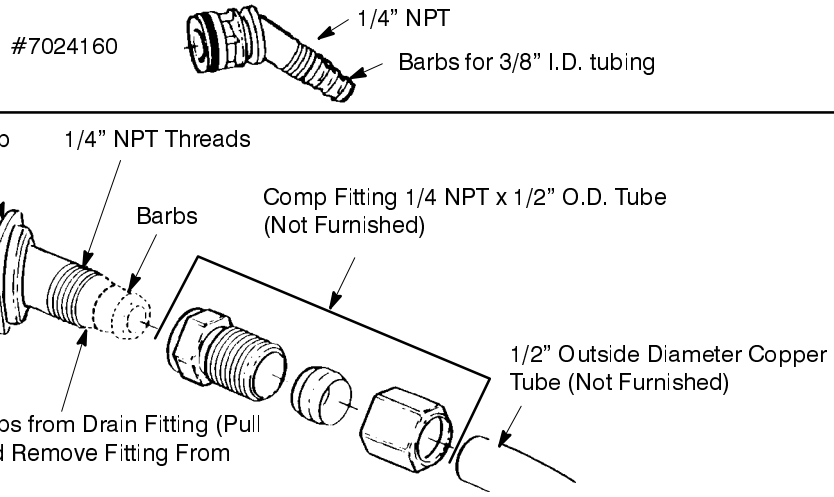

Figure 4

Select Installation Location

Consider all of the following when selecting an installation location for the unit.

- To condition all water in the home, install the unit close to the water supply inlet, and before all other plumbing connections, EXCEPT outside water pipes. Outside faucets should remain on hard water to avoid wasting conditioned water and salt.
- A nearby drain is needed to carry away regeneration discharge water. Use a floor drain, laundry tub, sump, standpipe, etc., or other options (check your local codes).
- **The unit works on 24 volts only**. A transformer, with a 10' power cord attached, is included to reduce 120-60 Hz household electrical power. Provide an approved, grounded outlet within 10' of the unit.
- **Always install the unit BEFORE the water heater** and after all other installed water conditioning equipment (see Figure 5 below).

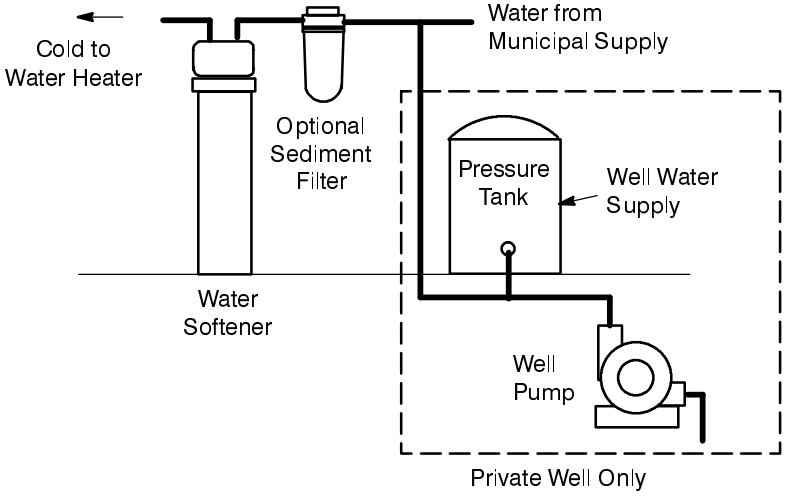

Figure 5

Optional Weather Protection

If installing the unit in an outside location, be sure to provide protection from the elements, contamination, vandalism, and direct sunlight.

An optional Weather Cover is available for outdoor installations by calling 1-888-64 WATER, or visiting the website at www.systemsaver.com.

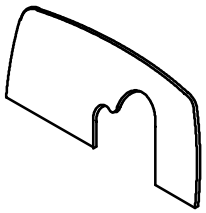

Figure 6

Installation

Step 1. Turn Off Water Supply

1. Close the main water supply valve, near the well pump or water meter.
2. Shut off the electric or fuel supply to the water heater.
3. Open all faucets to drain all water from the house pipes.

Step 2. Move the Unit into Place

Move the unit into installation position. Set it on a solid, smooth and level surface. If needed, place the unit on a section of plywood, a minimum of 3/4" thick. Then, shim under the plywood to level the unit, see Figure 7.

CAUTION: ***DO NOT PLACE SHIMS DIRECTLY UNDER THE SALT STORAGE TANK.*** **The weight of the tank, when full of water and salt, may cause the tank to fracture at the shim.**

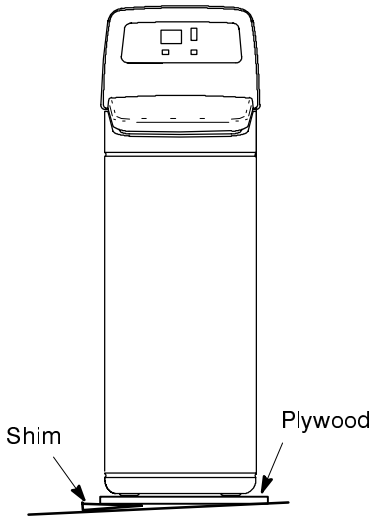

Figure 7

Visually check and remove any foreign materials from the valve inlet and outlet ports.

If not already done, put a light coating of silicone grease or Vaseline on the bypass valve o-rings.

Push the bypass valve into the softener valve as far as it will go. **Snap the 2 large holding clips into place, from the top down as shown in Figure 8.**

CAUTION: Be sure the clips snap firmly into place so the bypass valve will not pull out.

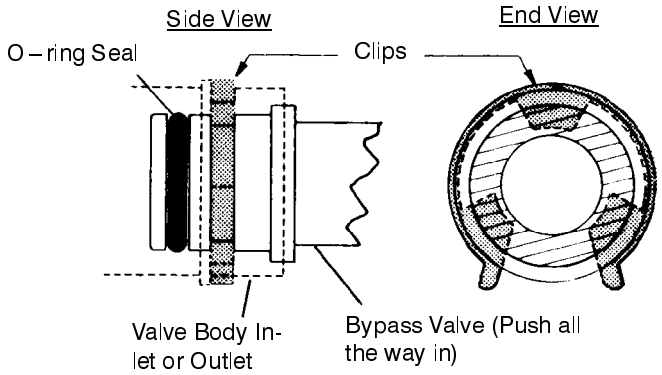

Figure 8

Step 3. Assemble Inlet and Outlet Plumbing

Measure, cut, and loosely assemble pipe and fittings from the main water pipe to the inlet and outlet ports of the valve.

Be sure **hard water** supply pipe **goes to** the valve **inlet side**.

NOTE: Inlet and outlet are marked on the valve. Trace the water flow direction to be sure.

CAUTION: Be sure to fit, align and support all plumbing to prevent putting stress on the softener valve inlet and outlet. Undo stress may cause damage to the valve.

Step 4. Connect Inlet and Outlet Plumbing

Complete the inlet and outlet plumbing as applicable, below.

1. SOLDERED COPPER
   a. Thoroughly clean and flux all joints.
   b. Make all solder connections. Be sure to keep fittings fully together, and pipes square and straight. **DO NOT solder with installation tubes attached to bypass valve.** Soldering heat will damage the valve.
2. THREADED PIPE
   a. Apply pipe joint compound to all outside pipe threads.
   b. Tighten all threaded joints.
   c. If soldering to the inlet and outlet tubes, observe step **1** above.
3. CPVC PLASTIC PIPE
   a. Clean, prime and cement all joints, following the manufacturer's instructions supplied with the plastic pipe and fittings.
   b. If soldering to the inlet and outlet tubes, observe Soldered Copper step **1** above.

Step 5. Cold Water Pipe Grounding

WARNING: The house cold water pipe (metal only) is often used as a ground for the house electrical system. The 3-valve bypass type of installation, shown in Figure. 2, will maintain ground continuity. If you use a plastic bypass valve at the unit, continuity is broken. To restore the ground, do the following.

Install a #4 copper wire across the removed section of main water pipe, securely clamping at both ends, see Figure 9 (parts not included).

NOTE: Check local plumbing and electrical codes for proper installation of the ground wire.

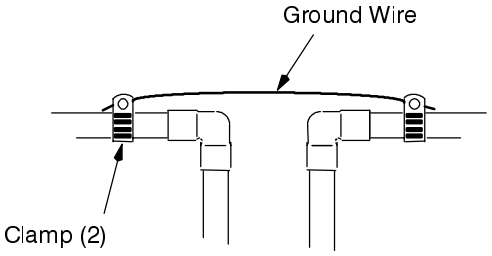

Figure 9

Step 6. Install Valve Drain Hose

NOTE: See valve drain options on page 11.

1. Connect a length of 3/8" or 7/16" I.D. hose (check codes) to the valve drain elbow, on the controller, see Figure 4. Use a hose clamp to hold the hose in place. Route the hose out through the notch in the Faceplate Cover.
2. Run the hose to the floor drain, and as typically shown in Figure 2, tie or wire the end to a brick or other heavy object. This will prevent "whipping" during regenerations. **Be sure to provide a 1-1/2" minimum air gap, to prevent possible sewer water backup.**

NOTE: In addition to a floor drain, you can use a laundry tub, or standpipe as a good drain point for this hose. Avoid long drain hose runs, or elevating the hose more than 8' above the floor.

Step 7. Install Salt Storage Tank Overflow Hose

1. Connect a length of 3/8" I. D. hose to the salt storage tank overflow elbow and secure in place with a hose clamp (see Figure 2).
2. Run the hose to the floor drain, or other suitable drain point **no higher than the drain fitting** on the salt storage tank. (This is a gravity drain.) If the tank overfills with water, the excess water flows to the drain point.

NOTE: Route the tubing neatly out of the way and cut it to the desired length.

DO NOT connect the valve drain tubing from step 6 to the salt storage tank over flow hose.

Step 8. Pressure Testing for Leaks

To prevent excessive air pressure in the unit and plumbing system, do the following steps EXACTLY in order.

1. Fully open two or more *softened* cold water faucets nearby the unit.
2. Place the bypass valve(s) in "bypass" position. See Figure 10.

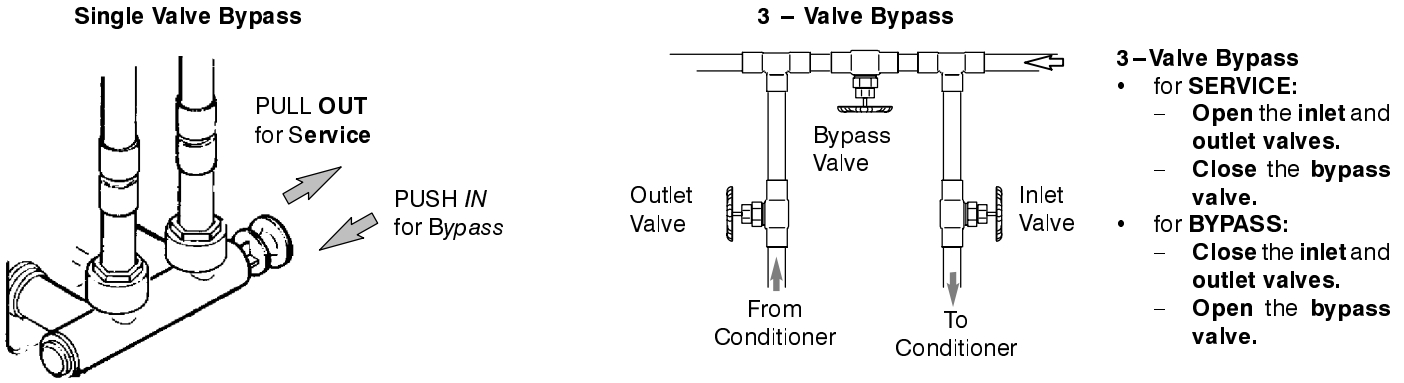

Figure 10

3. Fully open the main water supply valve. Observe steady flow from the opened faucets, with no air bubbles.
4. ***EXACTLY*** as follows, place bypass valve(s) in "service".
   a. SINGLE BYPASS VALVE: **SLOWLY,** move the valve stem toward "service", pausing several times to allow the unit to pressurize slowly.
   b. 3-VALVE BYPASS: Fully close the bypass valve and open the outlet valve. **SLOWLY,** open the inlet valve, pausing several times to allow the unit to pressurize slowly.
5. **After about three minutes, open a hot water faucet** for about one minute, or until all air is expelled, then close.
6. **Close all cold water faucets** and check your plumbing work for leaks.

Step 9. Add Water and Salt to the Salt Storage Tank

1. Using a container, add about one gallon of clean water into the salt storage tank.
2. Add Morton® System Saver® pellets to the salt storage tank.

NOTE: See page 22 for additional information on salt.

Step 10. Sanitizing the Softener

Care is taken at the factory to keep your unit clean and sanitary. Materials used to make the unit will not infect or contaminate your water supply, and will not cause bacteria to form or grow. However, during shipping, storage, installing and operating, bacteria could get into the unit. For this reason, sanitizing as follows is suggested [1] when installing.

[1] Recommended by the Water Quality Association. On some water supplies, the unit may need periodic disinfecting.

1. Remove the Brinewell Cover and pour about 1-1/2 oz. (2 to 3 tablespoons) of common household bleach into the softener brinewell, Figure 1, page 9. Clorox, Linco, BoPeep, White Sail, Eagle, etc. are brand names of bleach readily available. **Replace the Brinewell Cover.**
2. The final step in the sanitizing procedure is done as you complete the following steps, including timer programming on page 18.
3. This process will flush out all sanitizing solution and condition the unit.

Step 11. Connect Transformer

NOTE: Check to be sure all leadwire connectors are secure on the back of the electronic board.

CAUTION: Be sure all wiring is away from the valve gear and motor area, which rotates during regenerations.

1. Plug the transformer into a continuously "live", grounded house electrical outlet, approved by local codes. ***THE UNIT WORKS ON 24V ONLY. DO NOT CONNECT WITHOUT THE TRANSFORMER.***

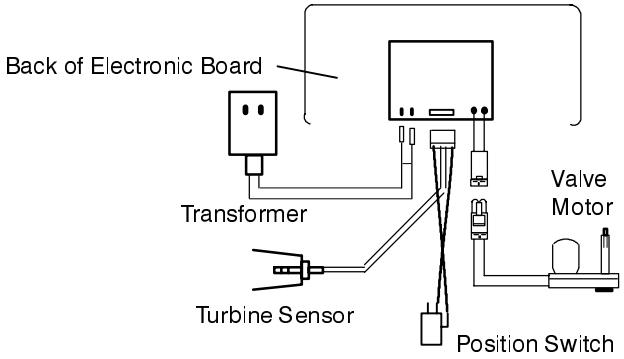

Figure 11

Step 12. Install the Salt Hole and Faceplate Cover(s).

Complete the Programming Steps on Pages 18, 19 and 20.

Step 13. Start a Recharge

Press the RECHARGE **(RECHARGE)** button and **hold** for three seconds until Recharge Now begins to flash in the timer display, starting a recharge. This recharge draws the sanitizing bleach into and through the unit. Any air remaining in the unit is purged to the drain.

Step 14. Restart the Water Heater

Turn on the electricity or fuel supply to the water heater, and light the pilot, if applicable.

NOTE: The water heater is filled with HARD water and, as hot water is used, it refills with conditioned water. In a few days, the hot water will be fully conditioned. To have fully conditioned hot water immediately, wait until the recharge (Step 13) is over. Then, drain the water heater until water runs cold.

If you have questions about installation, timer programming, operating and routine maintenance...

visit www.systemsaver.com
or call
1-888-64 WATER

Programming the Faceplate Timer

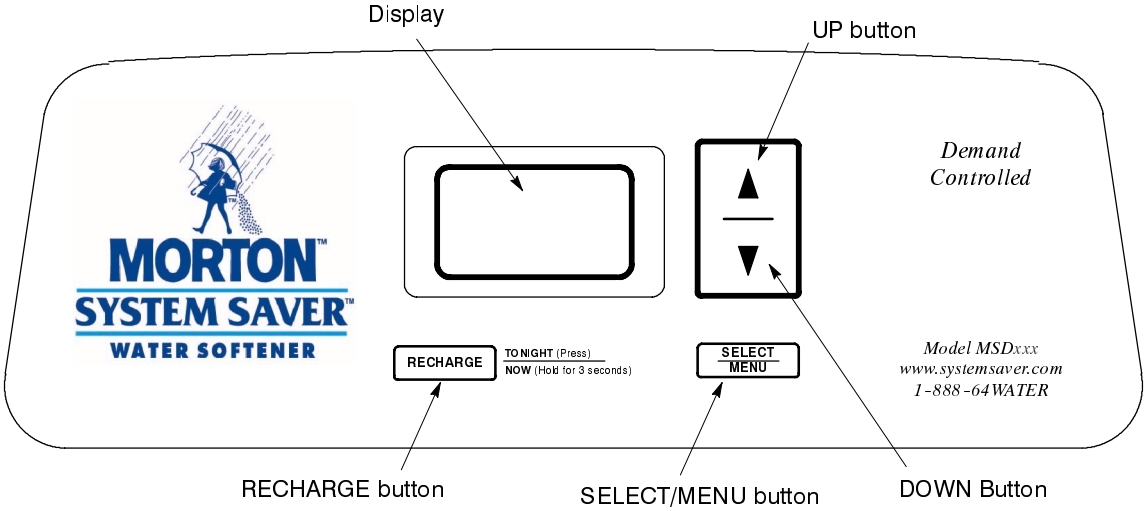

Figure 12

If you have questions about installation, programming, operating and routine maintenance...

visit www.systemsaver.com
or call
1-888-64 WATER

When the transformer is plugged into the electrical outlet, a model code and a test number (example: s3.0), begins to flash in the faceplate display. Then, *12:00 AM* and *PRESENT TIME* begins to flash.

NOTE: **If SR - - or - - - - shows in the display, press the UP ▲ or DOWN ▼ button until SR22 for model MSD27B, LE30 for model MSD30D, or SR28 for model MSD34C shows. Then, press the SELECT/MENU [SELECT MENU] button to set, and change to the flashing *PRESENT TIME* display.**

Step 1. Set Time of Day

If the words *PRESENT TIME* do not show in the display, press the [SELECT MENU] **(Select/Menu)** button until they do.

1. Press the ▲ **(Up)** or ▼ **(Down)** buttons to set the present time. Up moves the display ahead; down moves the time backward.

Be sure AM or PM, is correct.

NOTE: **Press buttons and quickly release to slowly advance the display. Hold for fast advance. *This procedure applies for all following settings.***

Step 2. Set Water Hardness Number

1. Press the SELECT MENU **(Select/Menu)** button once to display a flashing *25* and *HARDNESS*.

2. Press the ▲ **(Up)** or ▼ **(Down)** buttons to set your water hardness number.

NOTE: **Be sure to enter the grains per gallon (gpg) hardness of your water supply on page 4, for future reference. If your water supply contains iron, compensate for it by adding to the water hardness number.** ***For example, assume your water is 20 gpg hard and contains 2 ppm iron. Add 5 to the hardness number for each 1 ppm of iron. In this example, you would use 30 for your hardness number.***

	20 gpg hardness
2 ppm iron x 5 = 10	+10
(times)	30 HARDNESS NUMBER

Step 3. Set Recharge (Regeneration) Time

1. Press the SELECT MENU **(Select/Menu)** button once to display a flashing *2:00AM* and *RECHARGE TIME*.

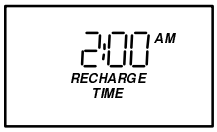

If no change is desired, go to **Step 4.** If you want to change the recharge start time, press the ▲ **(Up)** or ▼ **(Down)** buttons until the desired starting time shows.

Step 4. Set Salt Efficiency

When this feature is ON, the unit will operate at salt efficiencies of 4000 grains of hardness per pound of salt or higher. (May recharge more often using smaller salt dosage and less water).

1. Press **and hold** the [SELECT MENU] **(Select/Menu)** button until the following screen is displayed.

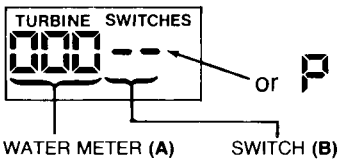

   Once in this display, press the [SELECT MENU] **(Select/Menu)** button and one of the following two displays is shown.

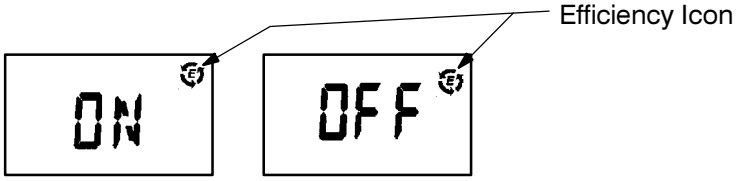

2. Press the ▲ **(Up)** or ▼ **(Down)** buttons to set On or Off. When set to On, the efficiency icon will be displayed in the upper right hand corner of the normal run display.
3. Press the [SELECT MENU] **(Select/Menu)** button once again, to complete initial programming. *RECHARGE TONIGHT* will show in the display.

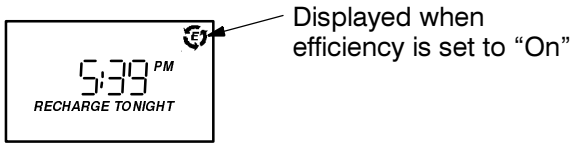

If you have questions about installation, programming, operating and routine maintenance...

visit www.systemsaver.com
or call
1-888-64 WATER

California Efficiency Requirement

Your Morton Water Softener has a "High Efficiency" feature with an "ON" or "OFF" setting. This softener setting is shipped in the "OFF" position, which utilizes the maximum rated capacity while most often achieving maximum salt efficiencies. When installing this unit in the State of California, you MUST turn this setting to the "ON" position which may initiate more frequent recharges, however it will operate at 4000 grains per pound of salt or higher.
If you wish to turn the Salt Efficiency feature "ON" (Ⓔ icon will show in display), follow the instructions on this page.

Customizing Features/Options

Recharge Now

If you have guests, or other times when more water than usual is used, you could begin to run out of conditioned water. If the unit is not scheduled to regenerate for another day or two, you could get hard water until then. If this occurs, do the following to start an immediate regeneration.

- Press and **hold** the RECHARGE **(Recharge)** button until **RECHARGE NOW** flashes in the display, and the softener enters the fill cycle of regeneration right away. **RECHARGE NOW** will flash during the regeneration. When over, full water conditioning capacity is restored.

RECHARGE NOW Initiated

NOTE: Avoid using hot water while the conditioner is regenerating, because the water heater will refill with bypass hard water.

Recharge Tonight

If you do not want to start an immediate recharge, but would like an extra recharge at the next preset recharge time, do the following to schedule a recharge.

- Press and **release** *(do not hold)* the RECHARGE **(Recharge)** button. **RECHARGE TONIGHT** flashes in the display, and the softener will recharge at the next recharge time. **RECHARGE NOW** will flash during the regeneration. When over, full water conditioning capacity is restored.

RECHARGE TONIGHT Initiated

Timer "Power–Outage Memory"

If electrical power to the timer is lost, "memory" built into the timer circuitry will keep *all* settings for up to six hours. While the power is out, the display is blank and the unit will not regenerate. When electrical power is restored, the following will occur.

1. You have to reset the present time **only** if the display is flashing. The HARDNESS and RECHARGE TIME never require resetting unless a change is desired. Even if the timer is incorrect after a long power outage, the softener works as it should to keep your water soft. However, regenerations may occur at the wrong time of day until you reset the timer to the correct time of day.

NOTE: If the unit was regenerating when power was lost, it will now finish the cycle.

Routine Maintenance

Refilling With Salt

Remove the Salt Storage Tank Front Cover and check the salt storage level frequently. If the conditioner uses all the Morton® System Saver® Pellets before you refill it, you will get hard water. Until you have established a refilling routine, check the salt every two or three weeks. ALWAYS add if less than 1/3 full. **Be sure the Brinewell Cover is on.**

NOTE: In humid areas, it is best to keep the salt storage level lower, and to refill more often.

RECOMMENDED SALT: We recommend using Morton® System Saver® Pellets in the familiar yellow bag. For soft water, nothing works harder. Guaranteed®.

SALT NOT RECOMMENDED: Rock salt, high in impurities, block, granulated, table, ice melting, ice cream making salts, etc., are not recommended.

SALT WITH IRON REMOVING ADDITIVES: Some salts have an additive to help a water conditioner handle iron in a water supply. For this we recommend Morton® Rust Remover Super Pellens® salt in the green bag.

Breaking A Salt Bridge

Sometimes, a hard crust or salt bridge forms in the brine tank. It is usually caused by high humidity or the wrong kind of salt. When the salt bridges, an empty space forms between the water and the salt. Then, salt will not dissolve in the water to make brine. Without brine, the resin bed does not regenerate and you will have hard water.

If the storage tank is full of salt, it is hard to tell if you have a salt bridge. Salt is loose on top, but the bridge is under it. Take a broom handle, or like tool, and push it straight down into the salt. If a hard object is felt, it's most likely a salt bridge. *Carefully* push into the bridge in several places to break it. **DO NOT use any sharp or pointed objects as you may puncture the tank.**

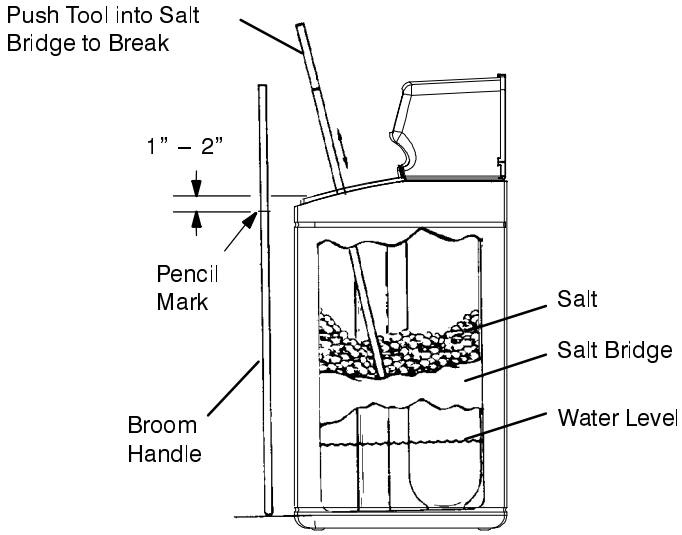

Figure 13

Cleaning the Nozzle and Venturi

A clean nozzle and venturi (see Figure 14) is a must for the conditioner to work properly. This small unit creates the suction to move brine from the brine tank, into the resin tank. If it should become plugged with sand, silt, dirt, etc., the conditioner will not work, and you will get hard water.

To get to the nozzle and venturi, slide Faceplate Cover forward. **Be sure the unit is in soft water cycle** (no water pressure at nozzle and venturi). Then, holding the nozzle and venturi housing with one hand, turn off the cap. *Do not lose the o-ring seal.* Lift out the screen support and screen. Then, remove the nozzle and venturi. Wash the parts in warm, soapy water and rinse in fresh water. If needed, use a small brush to remove iron or dirt. Be careful not to scratch, misshape, etc., surfaces of the nozzle and venturi. Also, check and clean the gasket and flow plug(s).

Carefully replace all parts in the correct order. Lubricate the o-ring seal with silicone grease and locate in position. Install and tighten the cap, **by hand only. Do not overtighten** and break the cap or housing.

If you have questions about routine maintenance...

visit www.systemsaver.com
or call
1-888-64 WATER

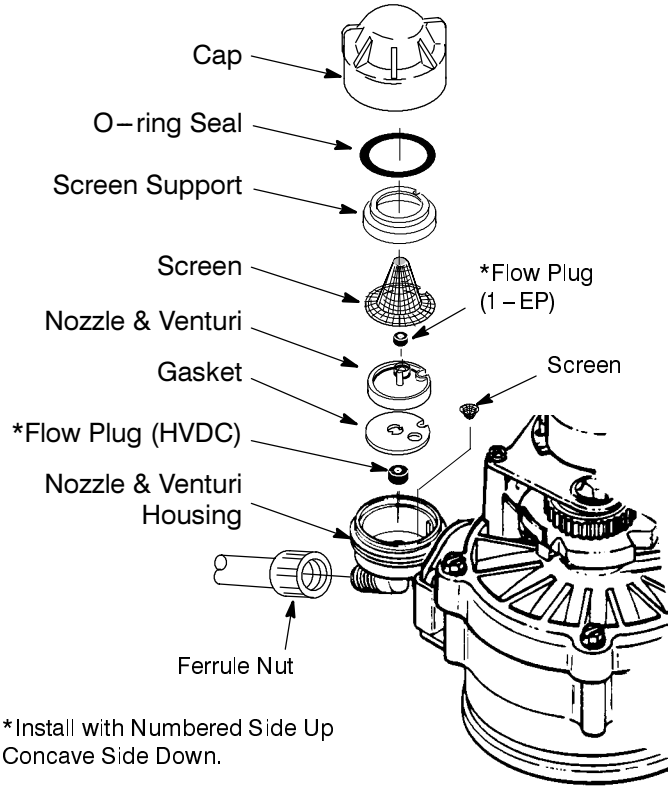

IMPORTANT: Be sure small hole in the gasket is **centered directly over** the small hole in the nozzle & venturi housing.

Figure 14

Protect the Water Softener from Freezing

If the softener is installed where it could freeze (summer cabin, lake home, etc.), you must drain all water from it to stop possible freeze damage. To drain the softener:

1. Close the shut-off valve on the house main water pipe, near the water meter or pressure tank.
2. Open a faucet in the soft water pipes to vent pressure in the softener.
3. Refer to Figure 10 on page 16. Move the stem in a single bypass valve to bypass. Close the inlet and outlet valve in a 3-valve bypass system, and open the bypass valve. If you want water in the house pipes again, reopen the shut-off valve on the main water pipe.
4. Unplug the transformer at the wall outlet. Remove the salt hole cover and the main cover. Take off both drain hoses.
5. Carefully remove the large holding clips at the softener inlet and outlet. Separate the softener from the copper tubes, or from the bypass valve.
6. Remove the brinewell cover and disconnect the brine valve tubing at the nozzle and venturi assembly (see Figure 1, page 9). Lift the brine valve out of the brinewell. Tip the brine valve upside down to drain water.
7. Looking at Figure 15, lay a piece of 2 inch thick board near the floor drain. Move the softener close to the drain. SLOWLY and CAREFULLY, tip it over until the rim rests on the wood block with the inlet and outlet over the drain. Do not allow the softener's weight to rest on the inlet and outlet fittings or they will break.
8. Tip the bottom of the softener up a few inches and hold until all water has drained. Leave the softener laying like this until you are ready to use it. Plug the inlet and outlet with rags to keep dirt, bugs, etc. out.

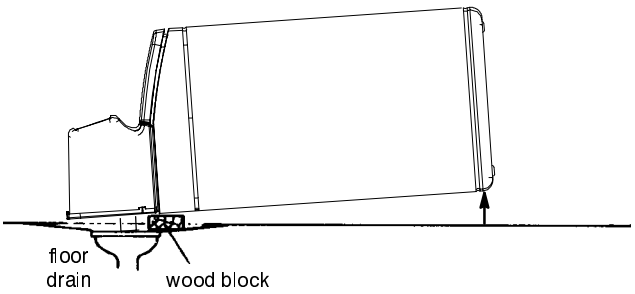

Figure 15

Troubleshooting Guide

Tools Needed For Most Repairs: 5/16 Hex Driver, Phillips Screwdriver, Needle–nose Pliers			
PROBLEM	**CAUSE**	**SOLUTION**	**REPAIR KIT(S) NEEDED**
No Soft Water	1. No salt in the storage tank	a. Add Morton System Saver Pellets (see page 22) b. Use Recharge Now feature (page 21)	None
No Soft Water Timer Display Blank	1. Transformer unplugged at wall outlet, or power cable disconnected from back of faceplate, Transformer defective	a. Check for loss of power and correct. Reset timer and use the Recharge Now feature (page 21)	Transformer
	2. Fuse blown, circuit breaker popped, or circuit switched off. (See page 21 "Timer Power Outage Memory").	a. Replace fuse, reset circuit breaker, or switch circuit on use the Recharge Now feature (page 21).	None
	3. Timer control board defective	a. Replace Electronic Control Board (page 28)	Timer Control Board
No Soft Water Salt Level Not Dropping	1. Salt in storage tank bridged	a. Refer to page 22 to break.	None
	2. Manual bypass valve(s) in bypass position	a. See page 16 figure 10. Move stem in single bypass to service	None
No Soft Water, Salt Storage Tank Full Of Water, Water Running To The Drain (While Unit Is In The Soft Water Cycle	1. Dirty, plugged or damaged nozzle & venturi	a. Take apart, clean and inspect nozzle and venturi (see page 23)	Nozzle Kit
	2. Inner valve defect causing leak	a. Replace seals and rotor (page 28)	Rotor/Seal Kit
	3. Valve drain hose plugged	a. Hose must not have any kinks, sharp bends or any water flow blockage (see page 10)	None
	4. Valve drain line and Salt Storage Tank overlow drain connected together by a tee.	a. Disconnect tee, run separate drain lines.	None
	5. Low or high system water pressure (low pressure may disrupt brine draw during recharge, high pressures may cause inner valve parts failure)	a. If pressure is low, increase well pump output to a minimum 20 psi. Add a pressure reducing valve in the supply pipe to the softener, if daytime pressure is over 100 psi.	None
	6. Brine valve float kit dirty or defective	a. Clean Brine or replace valve float kit assembly (page 28)	Float Kit
	7. Leak between valve and resin tank assembly	a. Replace Tank/Valve O–Rings	Tank/Valve O–ring Kit
Water Hard Sometimes	1. Time setting wrong	a. Check and change time setting	None
	2. Incorrect water hardness setting	a. Refer to page 19 to find correct settings	None
	3. Incorrect model code programmed	a. Refer to page 18 to find correct settings	None
	4. Hot water being used when softener is regenerating	a. Avoid using hot water while the softener is regenerating as the water heater will fill with hard water. Check timer for correct settings	None
	5. Possible increase in water hardness	a. Test the raw water for hardness and iron and program the timer accordingly (page 19).	None
	6. Leaking faucet or toilet valve. Excessive water usage.	a. A small leak will waste hundreds of gallons of water in a few days. Fix all leaks and always fully close faucets.	None
Iron In Water	1. Clear water iron in water supply 2. Iron in soft water 3. Bacterial or organic bound iron	a. Test the raw water for hardness and iron and program the timer accordingly (page 19). b. Clean resin bed with Resin Bed Cleaner c. Cannot be treated by water softener	None
Resin In Household Plumbing, Resin Tank Leaking	1. Crack in distributor or riser tube	a. Replace resin tank assembly (page 28)	Resin Tank Assembly
Salt Storage Tank Leaking	1. Crack in brine tank	a. Replace salt storage tank assembly (page 28)	Salt Storage Tank Assembly
Motor Stalled Or Clicking	1. Motor defective or inner valve defect causing high torque on motor	a. Replace Rotor/Seal kit (page 28) b. Replace Motor & Switch	Rotor/ Seal Kit Motor/Switch Kit
Error Code E1, E2, E3, or E4 appears	1. Wiring Harness or Connection to Position Switch 2. Switch 3. Valve Defect Causing High Torque 4. Motor Inoperative	a. Replace Wiring Harness or Connection to Position Switch b. Replace Switch c. Replace Rotor Seal Kit d. Replace Motor	Motor/Switch Kit Rotor/ Seal Kit
Error Code E5 appears	1. Faceplate	a. Replace Electronic Control Board	Electronic Control Board Kit

PROCEDURE FOR REMOVING ERROR CODE FROM FACEPLATE: 1. Unplug transformer from outlet– – – – 2. Correct defect– – – – 3. Plug in transformer– – – – 4. Wait for 6 minutes. The error code will return if the defect was not corrected.

Need help troubleshooting? Visit www.systemsaver.com or call 1–888–64 WATER.

Automatic Electronic Diagnostics

The faceplate has a self-diagnostic function for the electrical system (except input power and/or water meter). The faceplate monitors electronic components and circuits for correct operation. If a malfunction occurs, an error code appears in the faceplate display.

The troubleshooting chart on page 25 shows the error codes that could appear, and the possible defects for each code.

While an error code appears in the display, all faceplate buttons are inoperable except the SELECT/MENU button. SELECT/MENU remains operational so the service person can perform the *Manual Advance Diagnostics,* see below, to further isolate the defect.

Manual Advance Diagnostics

Use the following procedures to advance the unit through the regeneration cycles to check operation.

Remove the Faceplate Cover to observe cam and switch operation during valve rotation.

1. Press and **hold** [SELECT MENU] **(Select/Menu)** for 3 seconds until 000 - - shows in the display.

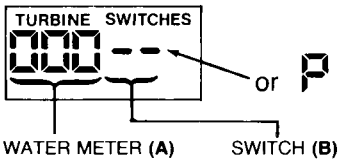

2. The first 3 digits indicate water meter operation as follows:

   000 (steady) = Soft water not in use, and no flow through the meter.

   —OPEN A NEARBY SOFT WATER FAUCET —

   000 to 199 (continual) = Repeats display for each gallon of water passing through the meter.

NOTE: **If you don't get a reading in the display, with faucet open, pull the sensor from the valve outlet port. Pass a small magnet back and forth in front of the sensor. You should get a reading in the display. If you get a reading, unhook the in and out plumbing and check the turbine for binding.**

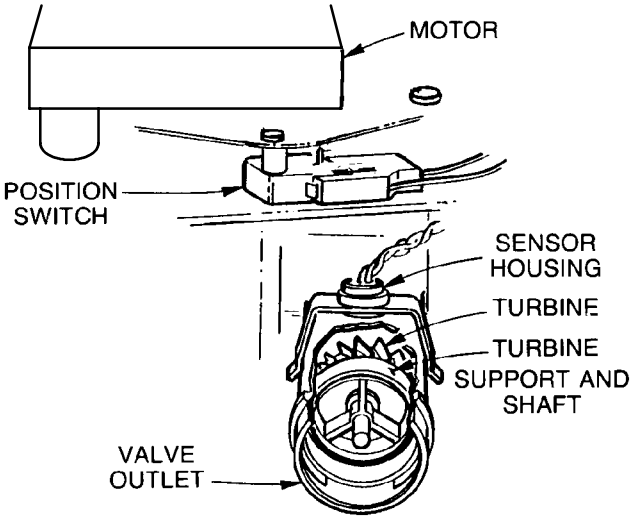

3. The letter (P) and dash (or dashes) indicate POSITION switch operation. If the letter appears, the switch is closed. If the dash shows, the switch is open.

4. Use the [RECHARGE] **(Recharge)** button to manually advance the valve into each cycle and check correct switch operation.

NOTE: Be sure water is in contact with the salt, and not separated by a salt bridge... see page 22.

5. While in this diagnostic screen, the following information is available and may be beneficial for various reasons. This information is retained by the computer from the first time electrical power is applied to the face plate.
   a. Press ▲ **(Up)** to display the number of days this face plate has had electrical power applied.
   b. Press ▼ **(Down)** to display the number of regenerations initiated by this face plate since the SR code number was entered.
6. Press and hold the [SELECT MENU] **(Select/Menu)** button until SR22 (for model MSD27B), LE30 (for model MSD30D) or SR28 (for model MSD34C) shows in the display.

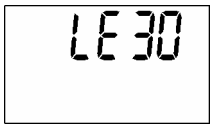

   This code identifies the softener model. If the wrong number shows, the softener will operate on incorrect programming.
7. Return the present time display — Press the [SELECT MENU] **(Select/Menu)** button.
8. To change SR number — Press the ▲ **(Up)** or ▼ **(Down)** button until the correct SR code shows. Then, press the [SELECT MENU] **(Select/Menu)** button to return to the present time display.

Manual Advance Regeneration Check

This check verifies proper operation of the valve motor, brine tank fill, brine draw, regeneration flow rates, and other controller functions. **Always make the initial checks, and the manual initiated diagnostics.**

NOTE: The faceplate display must show a steady time (not flashing). If an error code shows, first press the [SELECT MENU] (Select/Menu) button to enter the diagnostic display.

1. Press the [RECHARGE] **(Recharge)** button and hold in for 3 seconds. *RECHARGE* begins to flash as the softener enters the fill cycle of regeneration. Remove the brinewell cover and, using a flashlight, observe fill water entering the tank.
   a. If water **does not** enter the tank, look for an obstructed nozzle, venturi, fill flow plug, brine tubing, or brine valve riser pipe.
2. After observing fill, press the [RECHARGE] **(Recharge)** button to move the softener into brining. A slow flow of water to the drain will begin. Verify brine draw from the brine tank by shining a flashlight into the brinewell and observing a noticeable drop in the liquid level.

NOTE: Be sure a salt bridge is not preventing water with salt contact.

   a. If the unit does not draw brine, check for (most likely to least likely)
      - Dirty or defective nozzle and venturi, page 23
      - Nozzle and venturi not seated on the gasket, or gasket defective
      - Restriction in valve drain, causing a back-pressure (bends, kinks, elevated too high, etc.), installation Step 6 on page 15
      - Obstruction in brine valve or brine tubing

- Inner valve failure (obstructed outlet disc, wave washer defective, etc.)

NOTE: **If water system pressure is low, an elevated drain hose may cause back pressure, stopping brine draw.**

3. Again, press the RECHARGE **(Recharge)** button to move the softener into backwash. Look for a fast flow of water from the drain hose.
   a. An obstructed flow indicates a plugged top distributor, backwash flow plug, or drain hose.
4. Press the RECHARGE **(Recharge)** button to move the softener into fast rinse. Again look for a fast drain flow. Allow the softener to rinse for a few minutes to flush out any brine that may remain in the resin tank from the brining cycle test.
5. To return the softener to service, press the RECHARGE **(Recharge)** button.

Softener Components

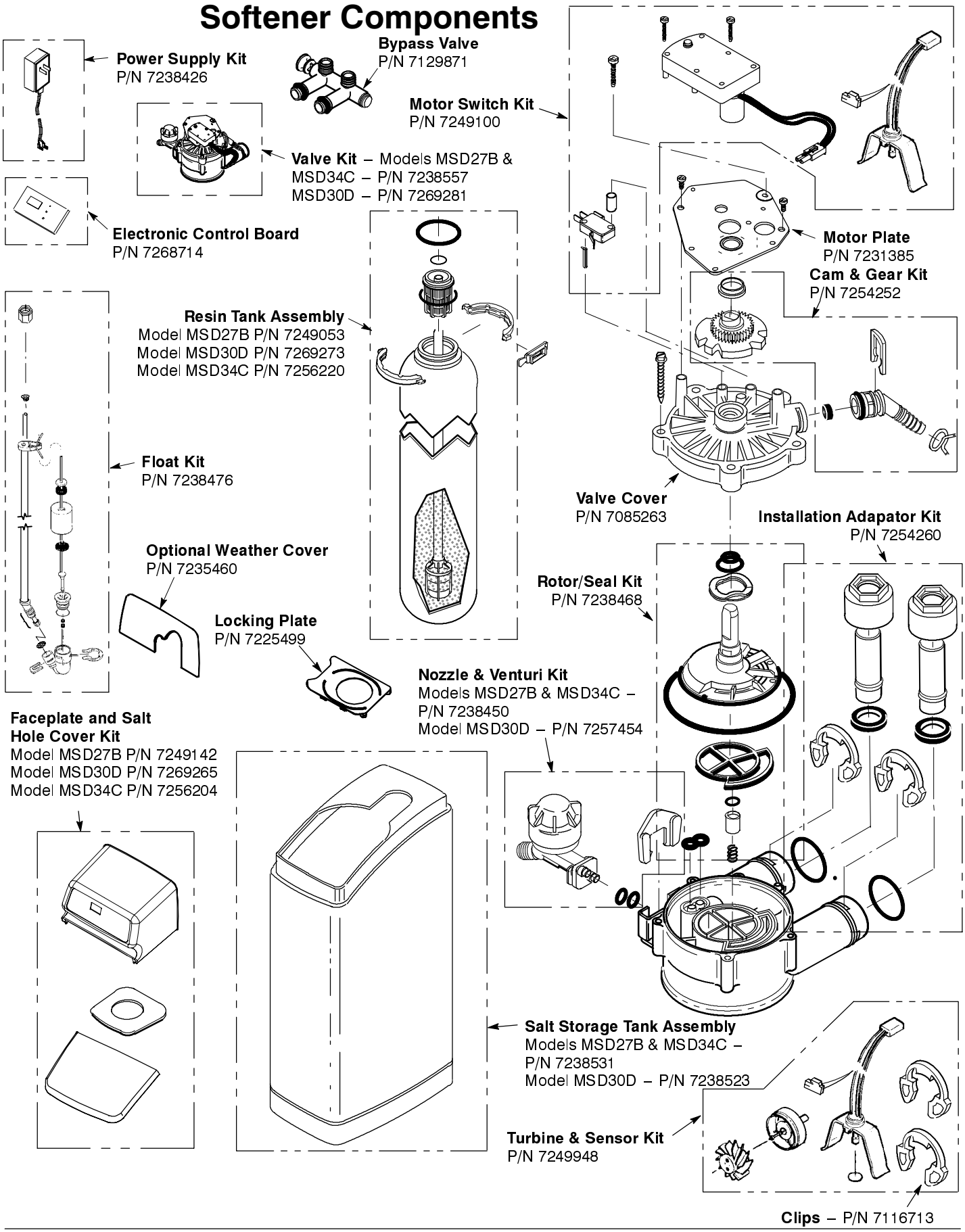

Notes

Warranty

MORTON RESIDENTIAL WARRANTY

Morton guarantees to the original owner, that:

For a period of ten (10) years from date of purchased, the salt storage tank and fiberglass mineral tank will not rust, corrode, leak, burst, or in any other manner, fail to perform their proper functions; and that

For a period of one (1) year after installation, all other parts will be free of defects in material and workmanship and will perform their normal functions.

If, during such respective period, a part proves to be defective, Morton will ship a replacement part, directly to your home, without charge. Labor necessary to maintain this product is not covered by the product warranty.

If you have questions regarding a Morton product, need assistance with installation or trouble shooting, wish to order a part or report a warranty issue, we are just a phone call away. Simply dial 1-888-64-WATER (1-888-649-2837) for assistance, or visit www.systemsaver.com.

This water softener is manufactured for Morton, P. O. Box 25290, Woodbury, MN 55125-0290

General Provisions

The above warranties are effective provided the water conditioner is operated at water pressures not exceeding 125 psi, and at water temperatures not exceeding 120°F; provided further that the water conditioner is not subject to abuse, misuse, alteration, neglect, freezing, accident or negligence; and provided further that the water conditioner is not damaged as the result of any unusual force of nature such as, but not limited to, flood, hurricane, tornado or earthquake.
Morton is excused if failure to perform its warranty obligations is the result of strikes, government regulation, materials shortages, or other circumstances beyond its control.

*THERE ARE NO WARRANTIES ON THE WATER CONDITIONER BEYOND THOSE SPECIFICALLY DESCRIBED ABOVE. ALL IMPLIED WARRANTIES, INCLUDING ANY IMPLIED WARRANTY OF MERCHANTABILITY OR OF FITNESS FOR A PARTICULAR PURPOSE, ARE DISCLAIMED TO THE EXTENT THEY MIGHT EXTEND BEYOND THE ABOVE PERIODS. THE SOLE OBLIGATION OF MORTON UNDER THESE WARRANTIES IS TO REPLACE OR REPAIR THE COMPONENT OR PART WHICH PROVES TO BE DEFECTIVE WITHIN THE SPECIFIED TIME PERIOD, AND MORTON IS NOT LIABLE FOR CONSEQUENTIAL OR INCIDENTAL DAMAGES. NO MORTON DEALER, AGENT, REPRESENTATIVE, OR OTHER PERSON IS AUTHORIZED TO EXTEND OR EXPAND THE WARRANTIES EXPRESSLY DESCRIBED ABOVE.

Some states do not allow limitations on how long an implied warranty lasts or exclusions or limitations of incidental or consequential damage, so the limitations and exclusions in this warranty may not apply to you. This warranty gives you specific legal rights, and you may have other rights which vary from state to state. This warranty applies to consumer-owned installations only.